Hegewald & Peschke
Meß- und Prüftechnik GmbH

Product Information

Shear frame testing system

for tensile load on textile semi-finished products and fibre-reinforced composites

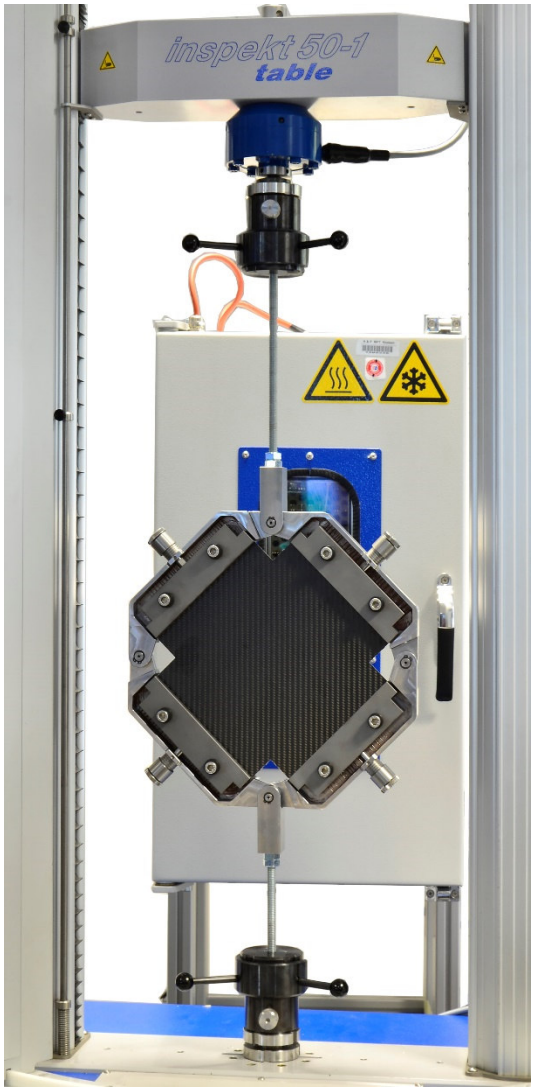

zertifiziert nach DIN EN ISO 9001
TÜV CERT
Zert. Nr. 08/100/9044/3

Hegewald & Peschke, Meß- und Prüftechnik GmbH
Am Gründchen 1, 01683 Nossen, Germany
Telephone: +49 35242 445-0, Telefax: +49 35242 445-111
E-Mail: info@hegewald-peschke.de
http://www.hegewald-peschke.com

Application

- Investigation of dry textiles and textile-reinforced plastics (e.g. prepregs or organosheets) with different types of bonding

By using the shearing device and evaluating of the shear force vs. shear angle diagrams it is possible to make statements about the expected deformability of materials. These are relevant for example for draping, which is a manufacturing process where flat semi-finished products are applied to curved surfaces.

Use

- Characterization of material properties at different temperatures
- Determination of the parameters limit angle and critical shear angle
- Optimization of manufacturing processes by evaluation of material behavior

Advantages

- Efficient clamping, so that the specimens do not slip out of the grips and no damage occurs at the transition to the clamping area
- Application of defined preloads up to 200 N
- Low-friction mechanics under all ambient conditions for high measuring accuracy
- High stiffness and strength

Technical Data

	14-101-013	**14-101-016**
Maximum load	500 N	5 kN
Dimension shear frame (WxDxH) [mm]	315 x 79 x 410	315 x 87 x 410
Clamping jaw surface W x H [mm]	150 x 16	
Specimen dimensions [mm]	238 x 238	
Weight	5.6 kg	6.9 kg
Travelling distance	100 mm, corresponds to a shearing angle of approx. 53°	
Temperature range	RT	-50°C up to 250°C
Included in delivery	• Shear frame • Mounting aid for the specimen assembly	

Necessary accessories	• Adaption for ball nut R30 in the testing machine for the integration of the frame
	• Set of clamping jaws:
	  ○ With pyramid teeth profile 1 mm, specimen thickness 1-3 mm (14-101-019)
	  ○ With wave profile, specimen thickness up to 2 mm (14-101-018)	

	Preload force system (14-101-014)	

Test description

In the shear test, pure shear is achieved by attaching a square specimen to a shear frame, clamping it at the opposite edges and deforming it into a rhombus up to a defined displacement. The force curve over the entire stroke is recorded. The shear angle can then be calculated from the change in length of the diagonal.

The critical shear angle and the limit angle are usually used to evaluate the shear behaviour.

To determine the limit angle, the shear force shear angle curve is divided into a linear and a non-linear zone. The limit angle is defined at the transition from the linear to the non-linear range.

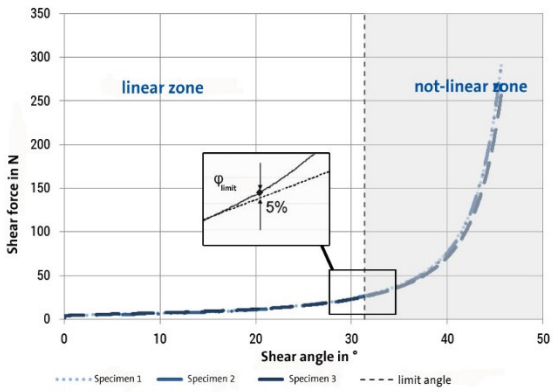

Fig. 1: Shear force-shear angle diagram with limit angle

The critical shear angle is defined at the beginning of the crease formation of the textile sample.

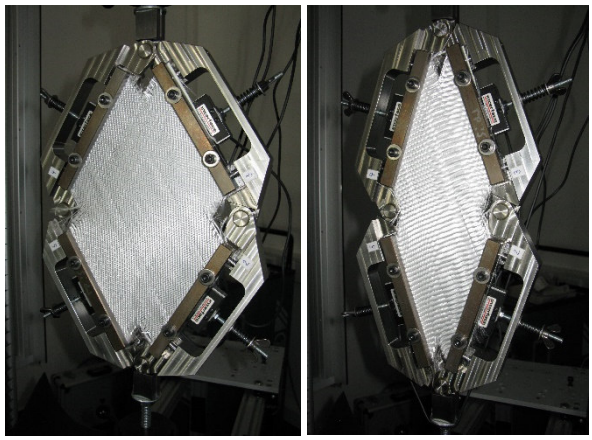

Fig. 2: Shearing device in the initial state and after deformation

Shear frame testing system for textile semi-finished products (14-101-013)

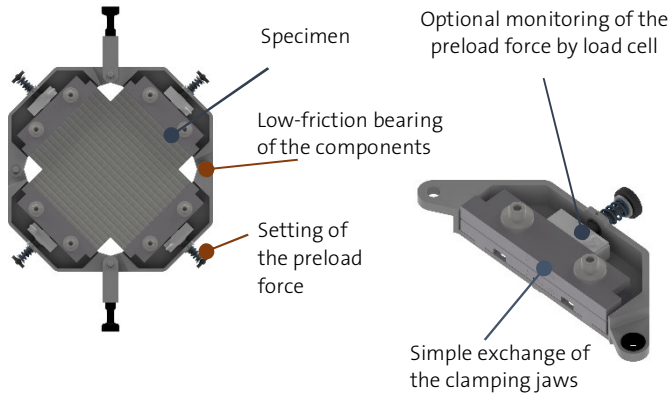
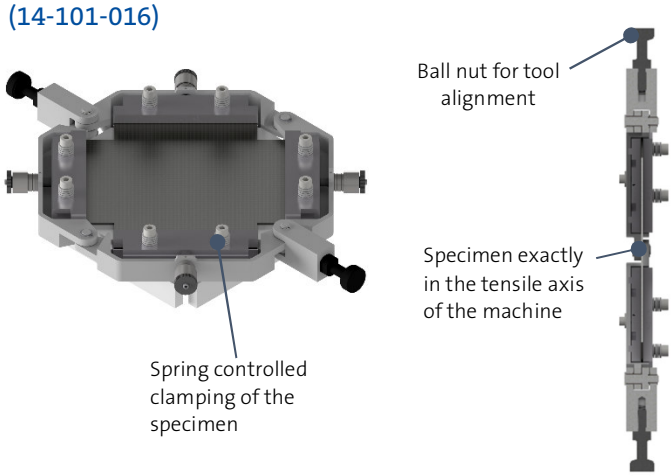
Shear frame testing system for composites (14-101-016)