Hydro-Tek®

MADE IN KOREA

Version 7

Your partner for Hydraulic solution Hydro-Tek®

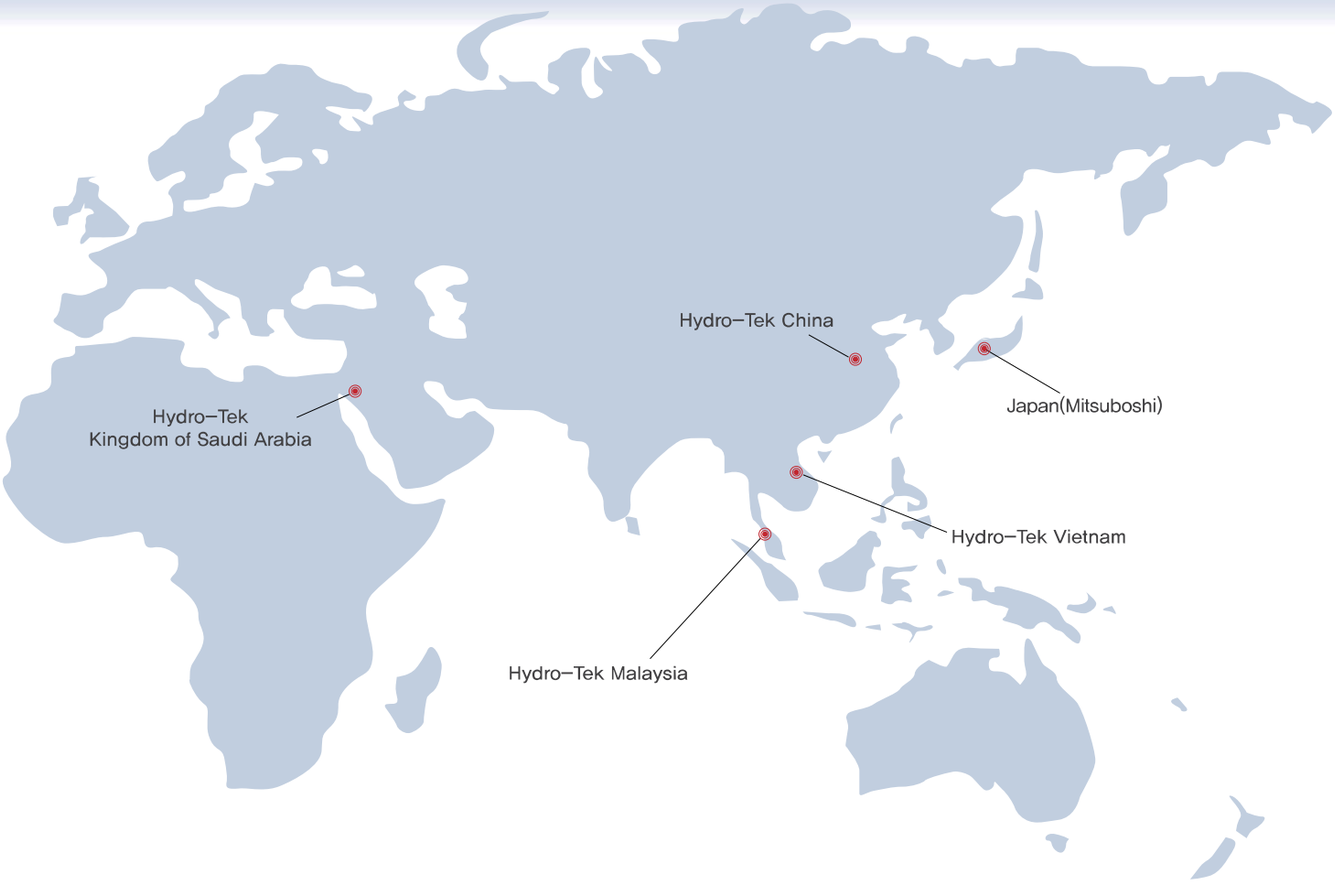

Kingdom of Saudi Arabia

Company name :
Saudi Basic Technology
Co., Ltd (SABTECH)
Address : P.O. Box 775, Jeddah
21421, Kingdom of Saudi Aribia
Tel: +966-2-608-0888
Fax : +966-2-608-0512
Contact point :
Mr. Ed Sanguenza
E-mail : ed@sabtech.com.sa

Malaysia

Company name :
Hydro-Tek South East
Asia Sdn Bhd
Address : 19 Jalan TPP
5/11, Taman Perindustrian
Puchong, Seksyen 5, 47100
Puchong, Selangor
D.E., Malaysia
Tel: +603-8061-9488
Fax:+603-8061-9455
Contact point:
Mr. Weli Chan
E-mail:weli@hydro-tek.com.my

China

Company name :
Hydro-Tek (Shanghai)
3#, Qingniandong-lu,
Qidong-City, (226200)
Jiangsu-Province,
Republic of China
Tel: +86 0513-83633385
Fax:+86 0513-83633185
Contact point :
Mr. Daniel Park
E-mail:sales@hydro-tek.com.cn

Vietnam

Company name :
Hydro-Tek Vietnam
Address : 412/3 No Trang
Long, Ward 13, Binh
Thanh District, Ho Chi Minh
City, Viet Nam
Tel: +84-8-3553-1553
Fax:+84-8-355-318-31
Contact point:
Mr. James Lim
E-mail:james@hydro-tek.vn

Japan

Company name :
MITSUBOSHI Co., Ltd
Address : 2-32, 1-Chome,
Higashi Ishikiri-cho
Higashi Osaka, Osaka-pree
JAPAN
Tel: +81-72-982-3661
Fax:+84-72-982-5427
Contact point:
E-mail:info@mtbs.co.jp

Canada

Company name : Canimex
Address : 285, Saint-Georges,
Drummondville, J2C 4H3, Canada
Tel : +1-819-477-1335
Fax : +1-819-477-2908
www.canimex.com

U.S.A

Company name : E.C.I
Address : 546 Old York Road,
PO Box 360 Three Bridges,
NJ 08887-0360 U.S.A
Tel : +1 800-847-8393
Fax : +1 908-788-8742
Mobile : +1 908-334-8334
Contact Point :
Mr. John M. Liggett
E-mail : john@engrcomp.com

U.S.A – FORCE America, Sales and Service Centers

FORCE America
2245 Vermont Ave.
Bismarck, ND 58504
Phone : +1 701-255-1495
Tel : +1 800-624-7568
Fax : 701-255-1615
E-mail : bismarck@forceamerica.com
Serves : ND, SD, AK, MT

FORCE America
601 East Cliff Road
Burnsville, MN 55337
Phone : +1 952-707-1300
Tel : +1 800-328-2732
Fax : 952-895-5312
E-mail : minneapolis@forceamerica.com
Serves : MN and Western WI

FORCE America
2200 Interstate North Drive, Suite: F
Charlotte, NC 28206
Phone : +1 704-285-6283
Tel : +1 800-788-8598
Fax : 704-597-8998
E-mail : charlotte@forceamerica.com
Serves : FL, GA, NC, SC,TN, AL

FORCE America
500 Brook Forest Ave.
Shorewood, IL 60404
Phone : +1 815-730-3600
Tel : +1 800-433-5765
Fax : 815-730-1700
E-mail : shorewood@forceamerica.com
Serves : IL, IN

FORCE America
4172 Fisher Road
Columbus, OH 43228
Phone : +1 614-351-4884
Tel : +1 888-449-0356
Fax : 614-351-8336
E-mail : columbus@forceamerica.com
Serves : OH, KY, MI, WV

FORCE America
1001 N. Union Bower Road,
Suite; 110 Irving, TX 75061
Phone : +1 214-678-0740
Tel : +1 800-893-7225
Fax : 214-678-0744
E-mail : dallas@forceamerica.com
Serves : TX, AR, LA,MS,OK

FORCE America
9652 Hanover Ct. West
Henderson, CO 80640
Phone : +1 303-288-7711
Tel : +1 888-833-7711
Fax : 303-288-8558
E-mail : denver@forceamerica.com
Serves : CO, WY,AZ, NM

FORCE America
30 North 25th Street
Fort Dodge, IA 50501
Phone : +1 515-573-8129
Tel : +1 800-362-2994
Fax : 515-955-2019
E-mail : fortdodge@forceamerica.com
Serves : IA, NE

FORCE America
1601 Airport Road
Waukesha, WI 53188
Phone : +1 262-896-3500
Tel : +1 800-722-5844
Fax : 262-896-3510
E-mail : milwaukee@forceamerica.com
Serves : WI

FORCE America
752 Enterprise Drive
Limerick, PA 19468
Phone : +1 610-495-4590
Fax : 610-495-4597
Tel : +1 800-492-6621
E-mail : philadelphia@forceamerica.com
Serves : CT, DE, MA, MD, ME, NH,
NJ, NY, PA, RI, VT, VA

FORCE America
216 NW Parkway Road
Riverside, MO 64150
Phone : +1 816-587-6363
Tel : +1 800-383-4724
Fax : 816-587-6464
E-mail : kansascity@forceamerica.com
Serves : KS, MO

FORCE America
5575 West 1730 S
Suite 105
Salt Lake City, UT 84104
Phone : +1 801-886-1602
Tel : +1 877-230-0505
Fax : 801-886-1612
E-mail : utah@forceamerica.com
Serves : CA, HI, ID, NV, OR, UT, WA

FORCE America
8690 Hacks Cross Road
Olive Branch, MS 38654
Phone : +1 662-932-7123
Tel : +1 888-845-5876
Fax : 662-368-1321
E-mail : memphis@forceamerica.com
Serves : AL, AR, MS, TN

Best Selling Power Pack

WING BODY / 윙바디

- Two double acting : Power up - Hold - Power down
- Box Type / Cetop 3 Directional Valve
- DC 12V / 24V 5.2 LPM @ 180 BAR
- 차량용 윙바디에 특화된 제품, SUS BOX
- DC 배터리 전용, 복복동 회로

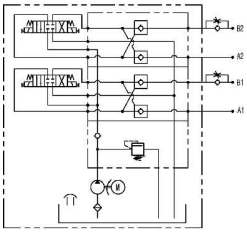

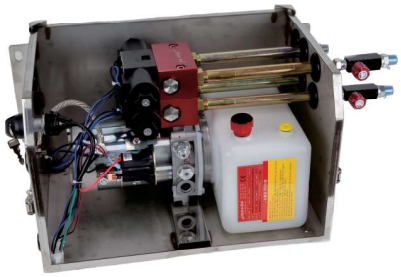

TAIL LIFT / 차량리프트 (유럽식)

- One single one double acting
- Light weight - Plastic cover and tank
- DC 12V/24V 4 LPM @ 200 BAR
- 차량용 리프트게이트에 특화된 제품
- DC 배터리 전용, 단복동 회로
- 외부 케이스 및 탱크를 강화 플라스틱 적용

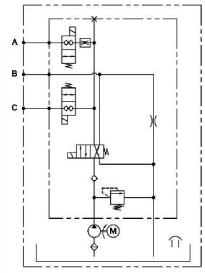

CYLINDER PACK / 실린더 팩

- Double acting
- Fixed flow control valve
- Max Force 25,000 (N)
- AC & DC motor (300W & 500W)
- 파워팩과 실린더를 일체형으로 제작
- AC 또는 DC 모터 전원 사용
- 배관 연결 불필요

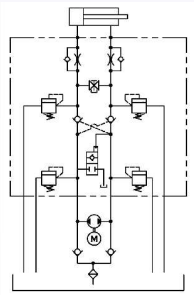

DOCK LEVELER / 도크레벨러

- Deck : Single acting / Lip : single or double acting
- AC Motor 4 LPM @ 120 BAR
- 도크레벨러에 특화된 제품
- 립 실린더는 단동과 복동 사양 중 선택 가능

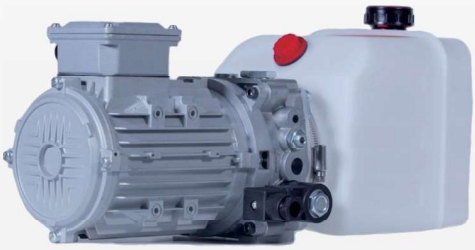

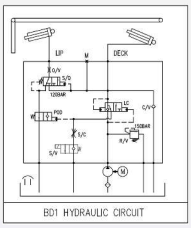

BD1 HYDRAULIC CIRCUIT

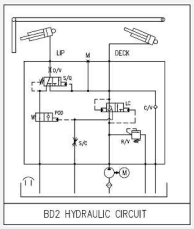

BD2 HYDRAULIC CIRCUIT

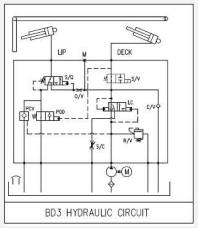

BD3 HYDRAULIC CIRCUIT

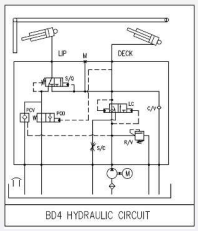

BD4 HYDRAULIC CIRCUIT

Typical Power Pack

PUMP MOTOR UNIT(PMU) / 펌프 모터 유니트

- Pump motor without tank
- DC 24v 3Kw + 4.3cc/rev
- DC motor 7 LPM @ 180 BAR
- 펌프 와 모터 일체형(탱크 제외 제품)
- 별도의 탱크 사용을 하기 위한 제품

TAIL LIFT(Kor.) / 차량 리프트(한국형)

- Tail Lift (Korea ver.) with SUS box
- DC 12V/24V 5.2 LPM @ 180 BAR
- 차량용 리프트에 특화된 제품, SUS BOX
- DC 배터리 전용, 버튼 케이스 포함

STACKER / 스태커

- Single acting :
  Power up - Hold - Gravity down
- Manually operated
- DC 12V / 24V 5.2 LPM @ 180 BAR
- 상승, 하강 시 수동 레버 작동

2 POST CAR LIFT / 차량 리프트(2주)

- Single acting :
  Power up - Hold - Gravity down
- AC motor 7 LPM @ 180 BAR
- 북미형 타입 2주 카리프트
- 하강 시 수동 레버 작동(솔 타입 선택 가능)

TAIL LIFT Ver.1 / 차량 리프트 Ver.1

- One single one double acting :
  Open - Gravity down - Power up-Close
- DC 800W 12V / 24V 2 LPM @ 200 BAR
- 차량용 리프트게이트에 특화된 제품
- 외부 케이스 및 탱크를 강화 플라스틱 적용

SCISSOR LIFT / 시저 리프트

- Single acting :
  Power up - Hold - Gravity down
- AC motor 4 LPM @ 180 BAR
- X타입 리프트용 AC 파워팩

DUMP TRAILER / 덤프 트레일러

- Double acting :
  Power up - Hold - Power down
- DC motor 2 LPM @ 180 BAR
- 덤프용 파워팩

SOLAR PANEL / 태양광 패널

- Two double acting :
  Power up - Hold - Power down
- AC motor 1 LPM @ 100 BAR
- 솔라 패널 및 복복동 회로 전용

WHEEL CHAIR LIFT / 휠체어 리프트(차량용)

- Single acting:
  Power up - Hold - Gravity down
- Emergency hand pump
- DC 12V / 24V 2 LPM @ 100 BAR
- 비상 핸드펌프 부착
- 장애인 차량용 휠체어 리프트

ENGINE PACK / 엔진 팩

- Compatible with
  Hydro-tek center block
- 6 HP Max 9LPM @ 200 BAR
- 13 HP Max 14 LPM @ 200 BAR
- 엔진 부착형 유압 팩
- 가솔린 엔진(6마력, 13마력)

BELT DRIVEN / 농기계

- Double acting:
  Power up - Hold - Power down
- Manually operated
- 벨트풀리 구동타입 파워팩
- 상승-하강 시 수동 레버 작동

TAIL LIFT Ver.2 / 차량 리프트 Ver.2

- One single one double acting :
- Open-Gravity down-Power up-Close
- DC motor 1.5 LPM @ 180 BAR
- 차량용 리프트게이트에 특화된 제품
- 탱크 강화 플라스틱 적용

Hydraulic Parts

Gear Pump

Variable Displacement Vane Pump

Solenoid Operated Directional Valve

Modular Valve

Flow Control Valve

Line Type Burst Valve

Ball Valve

Pressure Gauge

Pressure Switch

Cartridge Valve

Hydro-Tek System

Headquarter / 본사 (화성 마도)

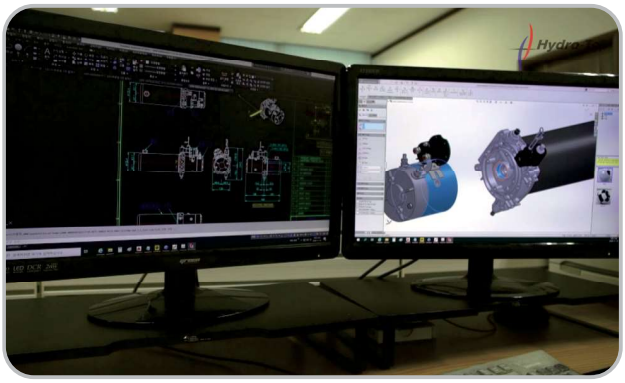

2D, 3D Design / 2D, 3D 설계

Endoscope / 블럭 내부 내시경 검사

Performance Inspection / 성능 테스트

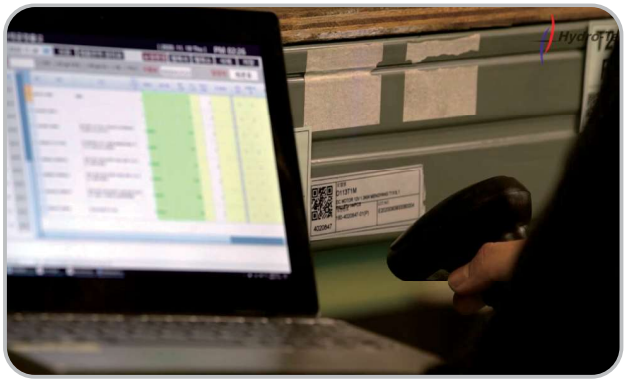

QR code Tracking / QR 코드 추적성 관리

Automation / 센터블럭 조립 자동화

Low temp. Test / 내한성 테스트 (-40 ℃)

Endurance Test / 내구성 테스트 (24hr)

Hydro-Tek Power Pack Program

ITEM CODE

1		2		3		4		5		6		7		8		9		10		11
	–	B 1	–		–		–	B	–		–		–		–		–		–	

DC MOTOR

1 D 1 1 6 T 1 – B

A/ B/ C / D Brand

A	MOTOR	XXX	Without motor
		D	Non-ventilation direct current motor
		M	Bi-directional direct current motor
		L	Ventilation direct current motor
B	VOLTAGE (V)	1	12V
		A	12V (With Flange)
		2	24V
		B	24V (With Flange)
		4	48V
C	POWER (W)	08	800 / 22 / 2200
		12	1200 / 24 / 2400
		16	1600 / 30 / 3000
		20	2000
D	START RELAY	T1	12V, 150A
		T2	24V, 150A
		I1	12V, 150A
		I2	24V, 150A
		A1	12V, 100A
		A2	24V, 100A
		XX	Without Start Relay

AC MOTOR

1 T 4 1 5 5 6 – B 1

A/ B/ C / D Brand / E

A	VOLTAGE (V)	XXX	Without motor		
		H	110V (1 ϕ)		
		S	220V (1 ϕ)		
		T	230 / 400V (3 ϕ)		
		F	254 / 440V (3 ϕ)		
B	POLE	2	2POLE		
		4	4POLE		
		6	6POLE		
C	POWER (kW)	01	0.18	18	1.8
		03	0.37	22	2.2
		07	0.75	30	3.0
		10	1.0	40	4.0
		15	1.5		
D	FREQUENCY	50	50Hz		
		60	60Hz		
		56	50/60Hz		
E	DUTY CYCLE	1	S1		
		2	S2		

CENTER BLOCK

2 X A 1 C

A / B / C

A	TYPE	One Group		Half Group		
		XA, CA		XB, QH, SH		
B	DIAGRAM	1	3	5	7	9
		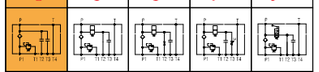				
		P2 port is available				
		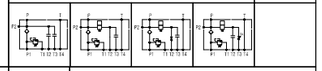				
C	PRESSURE RANGE	L	3 ~ 10 kg · f/㎠			
		A	10 ~ 60 kg · f/㎠			
		B	50 ~ 150 kg · f/㎠			
		C	100 ~200 kg · f/㎠			
		D	150 ~250 kg · f/㎠			
		F	50 ~120 kg · f/㎠ (Heavy flow)			

GEAR PUMP

3 G O 1 6 – B

A / B / C Brand

A	TYPE	G	Gear Pump		
		D	Bi-directional gear Pump		
		P	Bi-directional Piston Pump		
B	GROUP	O	One Group		
		H	Half Group		
C	DISPLACE MENT (㎤/rev)	02	0.2	27	2.7
		03	0.3	32	3.2
		05	0.5	37	3.7
		07	0.7	42	4.2
		08	0.8	48	4.8
		11	1.1	58	5.8
		13	1.3	70	7.0
		16	1.6	80	8.0
		21	2.1	98	9.8
		23	2.3		

Note. 1. Half group : 0.2~1.6 ㎤/rev
2. One group : 0.8~9.8 ㎤/rev
3. Please contact Hydro-Tek for Piston pump.

MOUNTING

4 H P P B

A / B / C / D

A	MOUNTING POSITION	H	Horizontal type
		V	Vertical type
B	AIR BREATHER POSITION	P	P-T port
		C	Cartridge cavity
		M	Base mounting
		F	Flank mounting
		S	Special
C	TERMINAL BOX (AC) or START RELAY (DC) POSITION	P	P-T port
		C	Cartridge cavity
		M	Base mounting
		F	Flank mounting
		S	Special
D	BRACKET	B	With bracket (Height : 30mm)
		H	With bracket (Height : 45mm)
		X	Without bracket

TANK

5 X R 0 3

A/ B / C

A	TYPE	M	J or EP-series C/B		Plastic Oil Tank
		X	X-series C/B	PL	X-series C/B
		Q	Q-series C/B	PX	X-series C/B
		S	S-series C/B	PC	C-series C/B
B	DESIGN	R	Round type		
		S	Square type		
C	CAPACITY (ℓ)	01	1	11	11
		02	2	12	12
		03	3	14	14
		04	4	15	15
		05	5	20	20
		06	6	25	25
		07	7	30	30
		08	8	50	50
		09	9		

Note. Please contact Hydro-Tek for your original specification and custom design.

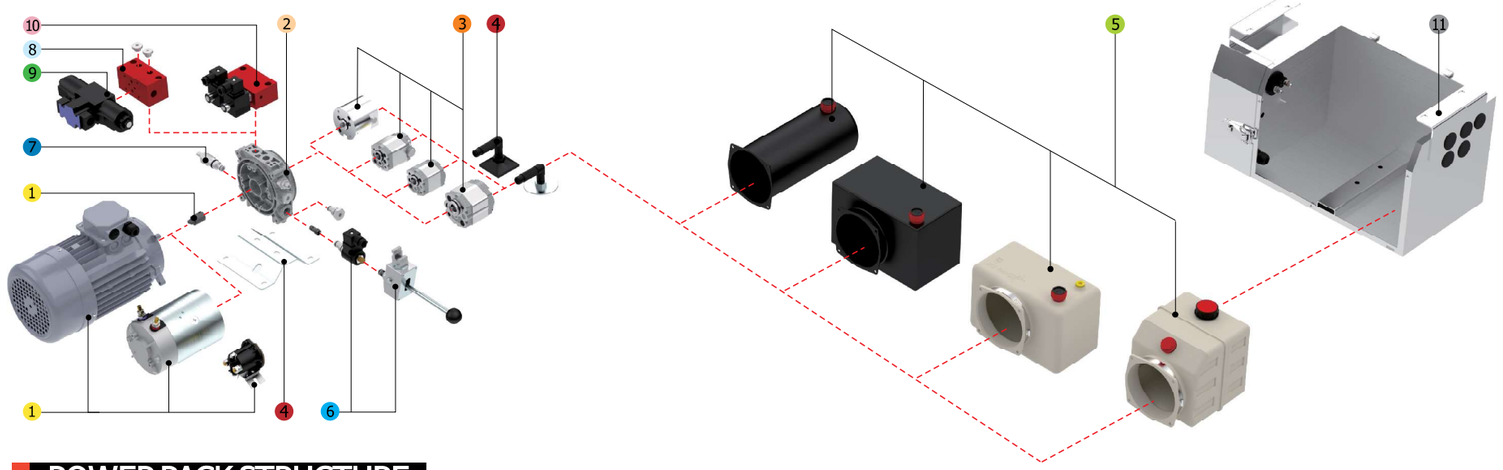

POWER PACK STRUCTURE

SOLENOID SANDWICH VALVE

10 D 2 4 8 B N –

A / B/ C/ D A / B/ C/ D

A	DIAGRAM	D1	DA	DY	D2
					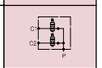
		D3	SS	DS	
					
B	VOLTAGE (V)	1	DC 12V	7	AC 24V
		2	DC 24V		
		3	AC 110V		
		4	AC 220V		
C	CAPACITY (ℓ)	8	08-Cavity		
D	TYPE	N	Din connector		
		NW	DIN Connector Wiring		
		S	Dual spades		
		L	Lead wire		
		R	Integral deutche connector		

Note. RAC is standard of AC coil

SOLENOID VALVE & COIL

6 S C 4 8 B N / N

A / B / C / D / Brand / E No emergency

A	TYPE	S	Solenoid valve
		MHXX	Micro s/w manual
		NNNN	Plug for cavity
B	DIAGRAM	C	Normally closed
		O	Normally open
		D	Double lock
C	VOLTAGE (V)	1	DC 12V
		2	DC 24V
		3	AC 110V
		4	AC 220V
D	CAPACITY (ℓ)	8	08-Cavity
E	TYPE	N	DIN Connector
		NW	DIN Connector Wiring
		S	Dual spades
		L	Lead wire
		R	Integral deutche connector

Note. RAC is standard of AC coil

PRESSURE COMPENSATED FIXED CONTROL VALVE

7 F 0 8

A / B

A	APPLICABLE C/B	F	X, C, QH		
		S	SH		
		G	D1, D3		
B	FLOW (ℓ/min)	01	1	06	6
		02	2	08	8
		03	3	10	10
		04	4	12	12

Note. GA : Pressure compensated adjustable throttle valve. (2~20 ℓ/min)

DIRECTIONAL SANDWICH BLOCK

8 B Y 3 1 –

A / B A / B

A	DIAGRAM	BY6/BY5	BY2	BY3/BH3
		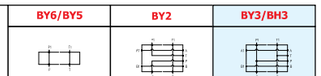		
		BY4/BH4	BYF	BYW
		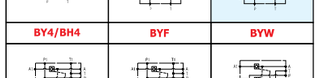		
B	QUANTITY	Directional sandwich block QUANTITY		

Note. 1. If you need more than 2pcs of different modular blocks, please specify them in next blank.
2. SB-series : Special sandwich block.
3. Please contact Hydro-tek for different specification of directional sandwitch blocks.

9 Y A 4 1 1 0 –

A / B/ C / D/ E A / B/ C / D/ E

A	DIAGRAM	YA	YP	YC	YO	YT
						
		HA	HP	HC	HO	HB
						
B	VOLTAGE (V)	1	DC 12V			
		2	DC 24V			
		3	AC 110V			
		4	AC 220V			
C	QUANTITY	Directional valve QUANTITY				
D	PORT TYPE	1	CETOP-3			
E	TYPE	B	Terminal Box (Bolt : M5)			
		D	Din (Bolt : M5)			
		U	Din (Bolt : No. 10-24 UNC)			

Note. 1. If you need more than 2pcs of different modular blocks, please specify them in next blank.
2. Please contact Hydro-tek for detent, cartridge and manual type.

BOX TYPE POWER PACK

11 L C

A

A	DESIGN	LX	Box type without button case smaller than LS
		LM	Box type with button case smaller than LS
		LS	Box type with button case smaller than LC
		LC	Box type with button case
		WR	Box type without button case

Note. Please contact Hydro-Tek for STEEL box.

TYPICAL TYPE - *WING BODY*

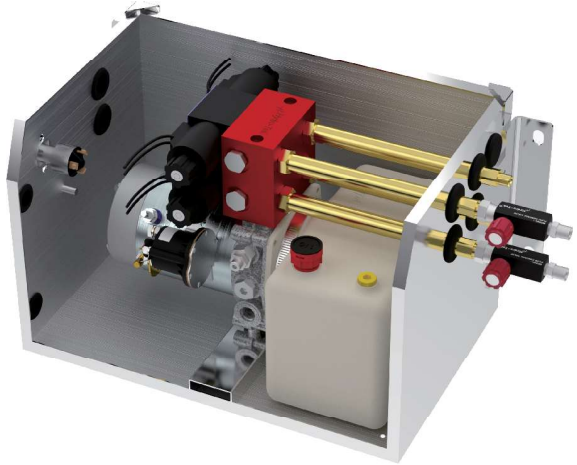

Description

- Two double acting :
  Power up - Hold - Power down
- Box type / Cetop 3 Directional valve
- DC 12V/24V 5.2 LPM @ 180 BAR

Power Pack for *WING BODY*

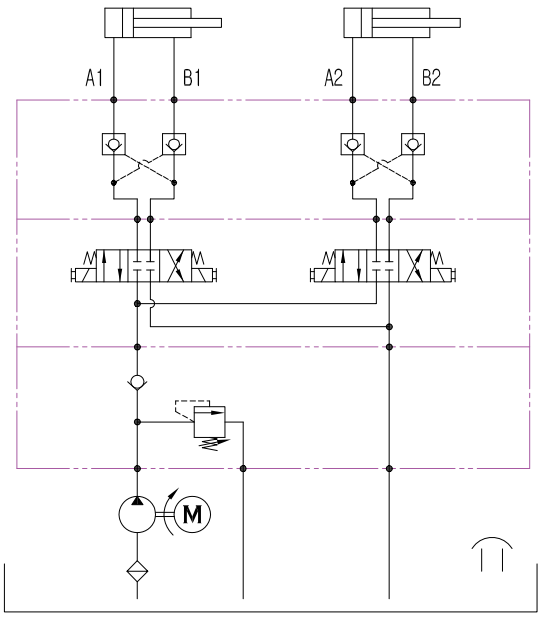

Hydraulic Circuit

Application - *WING BODY*

TYPICAL TYPE - *TIPPER*

Description

- Single acting:
  Power up – Hold – Gravity down
- Manual lowering valve (option)
- Pressure compensated fixed control valve

Power Pack for *TIPPER*

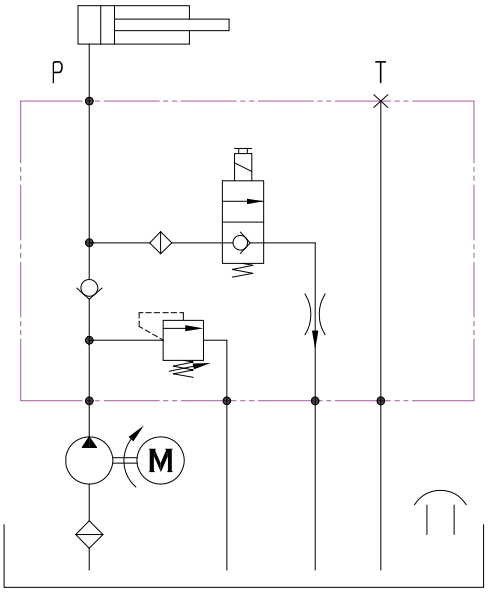

Hydraulic Circuit

Application - *TIPPER*

TYPICAL TYPE - *STACKER*

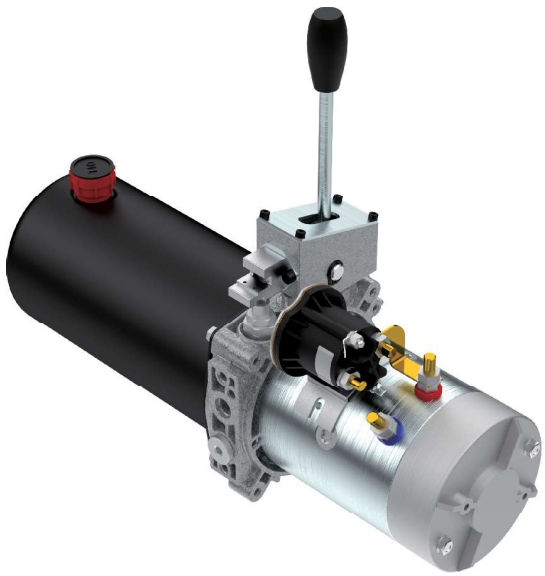

Description

- Single acting:
  Power up – Hold – Gravity down
- Manually operated
- Adjustable lowering speed by lever angle
- DC 12V/24V 5.2 LPM @ 180 BAR

Power Pack for *STACKER*

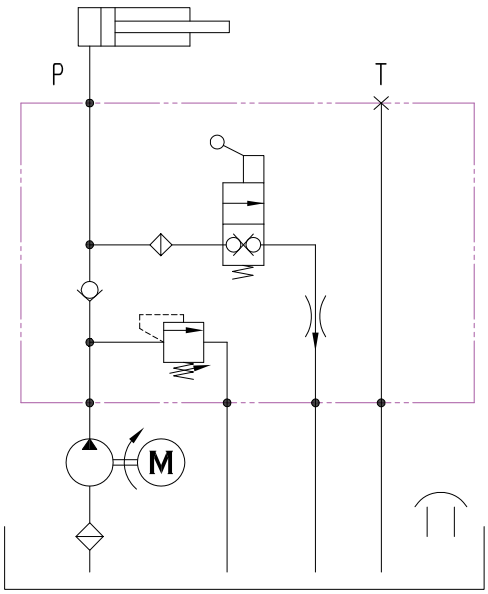

Hydraulic Circuit

Application - *STACKER*

TYPICAL TYPE - *DOCK LEVELER*

Description

- Deck: single acting
  / Lip : single or double acting(option)
- Deck up → Lip open → Deck down (Lip holding) → Deck up (Lip close) → Deck down
- AC motor 4LPM @ 120 BAR

Power Pack for *DOCK LEVELER*

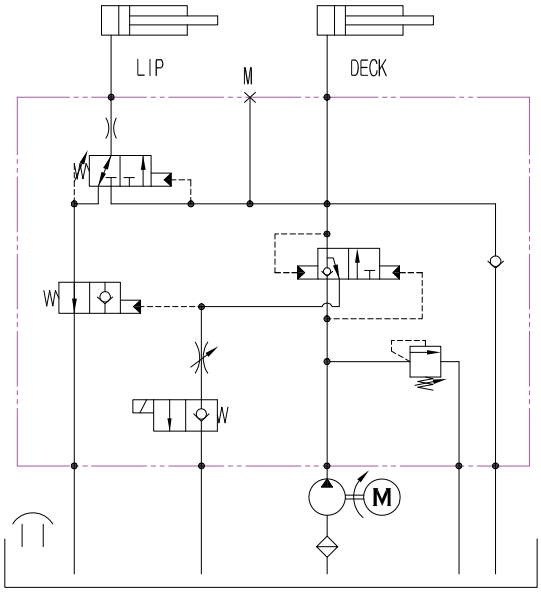

Hydraulic Circuit

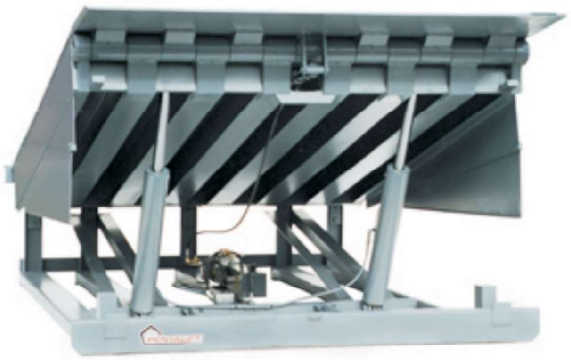

Application - *DOCK LEVELER*

TYPICAL TYPE

- CARRIER FOR AGRICULTURE

Description

- Double acting :

  Power up – Hold - Power down

- Manually operated

Belt-driven Power Pack for *CARRIER FOR AGRICULTURE*

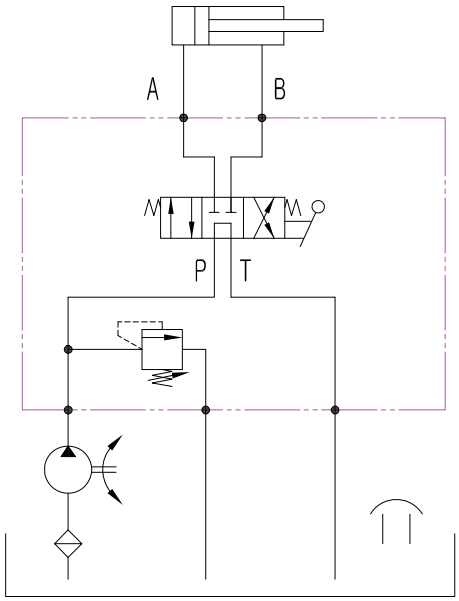

Hydraulic Circuit

Application - *CARRIER FOR AGRICULTURE*

TYPICAL TYPE - *TIRE CHANGERS*

Description

- Four double acting :
  Power up – Hold – Power down
- Cetop 3 Directional valve
- AC motor 4LPM @ 180 BAR

Power Pack for *TIRE CHANGERS*

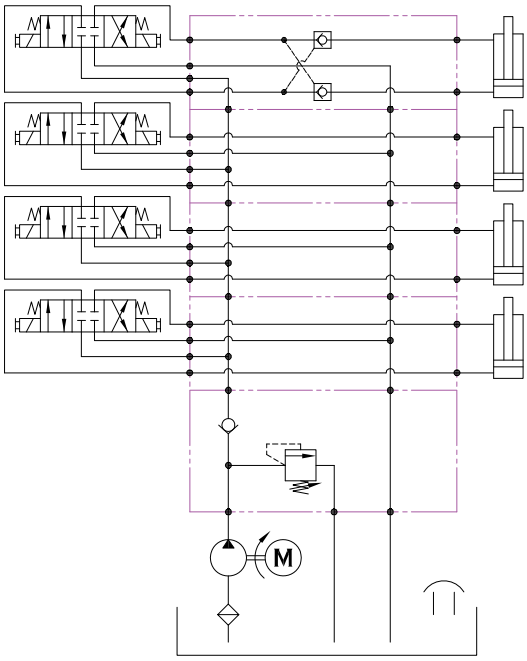

Hydraulic Circuit

Application - *TIRE CHANGERS*

TYPICAL TYPE - *CAN PRESS*

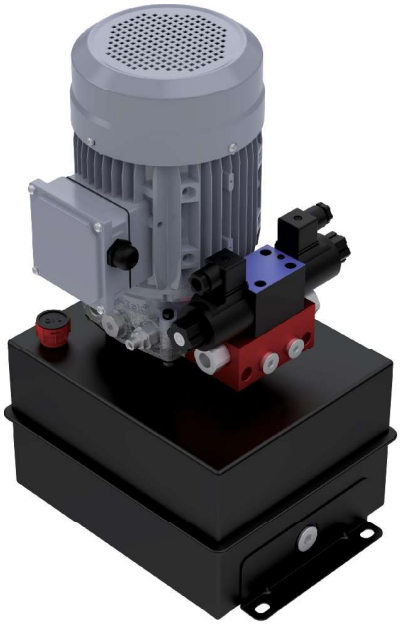

Description

- Double acting :
  Power up – Hold – Power down
- Cetop 3 Directional valve
- AC motor 4LPM @ 180 BAR

Power Pack for *CAN PRESS*

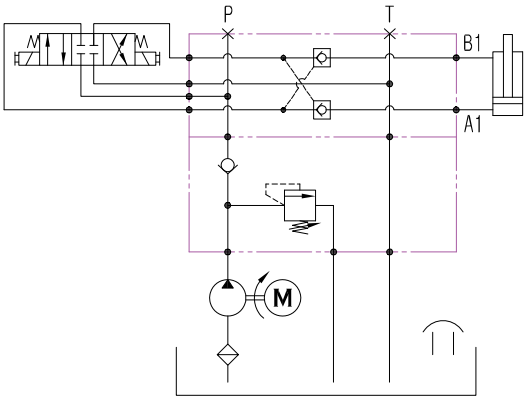

Hydraulic Circuit

Application - *CAN PRESS*

TYPICAL TYPE

- WHEEL CHAIR LIFT

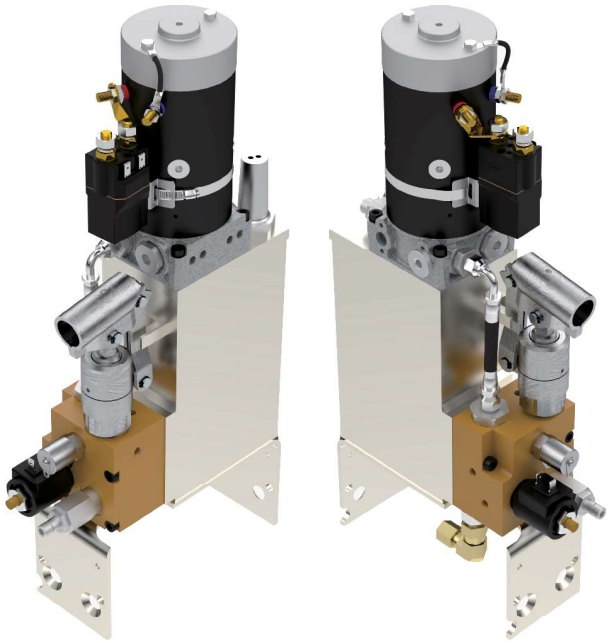

Description

- Single acting :
  Power up – Hold – Gravity down
- Emergency hand pump
- DC 12V/24V 2 LPM @ 100 BAR

Power Pack for *WHEEL CHAIR LIFT*

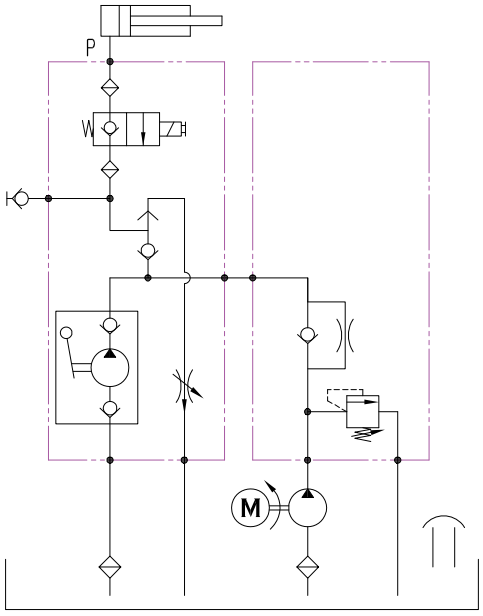

Hydraulic Circuit

Application - *WHEEL CHAIR LIFT*

TYPICAL TYPE - 4 POST CAR LIFT

Description

- Three single acting :
  Power up – Hold – Gravity down
- Pressure compensated fixed control valve
- AC motor 7 LPM @ 180 BAR

Power Pack for *4 POST CAR LIFT*

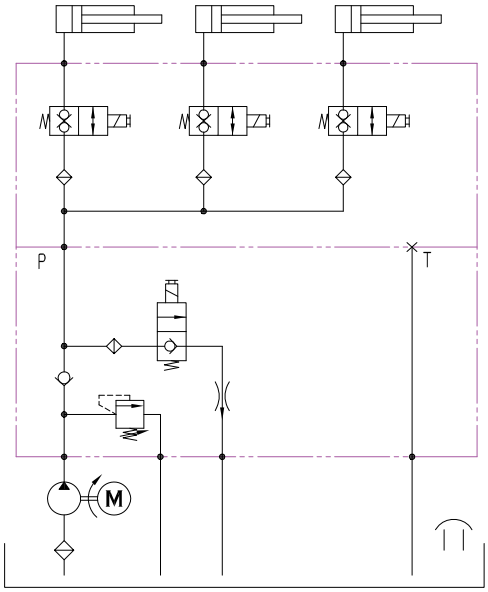

Hydraulic Circuit

Application - *4 POST CAR LIFT*

TYPICAL TYPE - 2 POST CAR LIFT

Description

- Single acting :
  Power up – Hold – Gravity down
- Pressure compensated fixed control valve
- AC motor 7 LPM @ 180 BAR

Power Pack for *2 POST CAR LIFT*

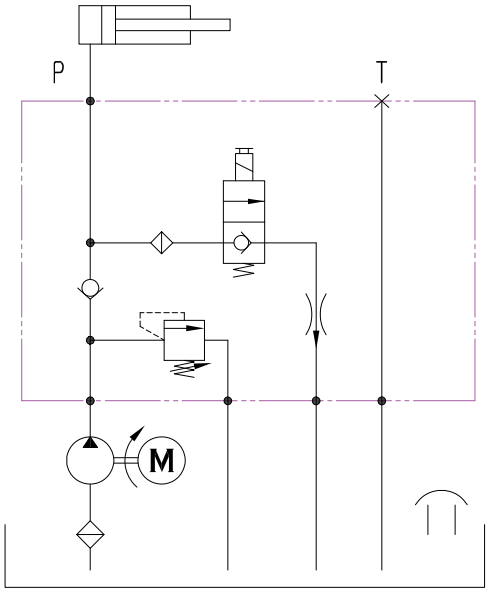

Hydraulic Circuit

Application - *2 POST CAR LIFT*

TYPICAL TYPE - *SCISSOR LIFT*

Description

- Single acting :
  Power up – Hold – Gravity down
- Pressure compensated fixed control valve
- AC motor 4 LPM @ 180 BAR

Power Pack for *SCISSOR LIFT*

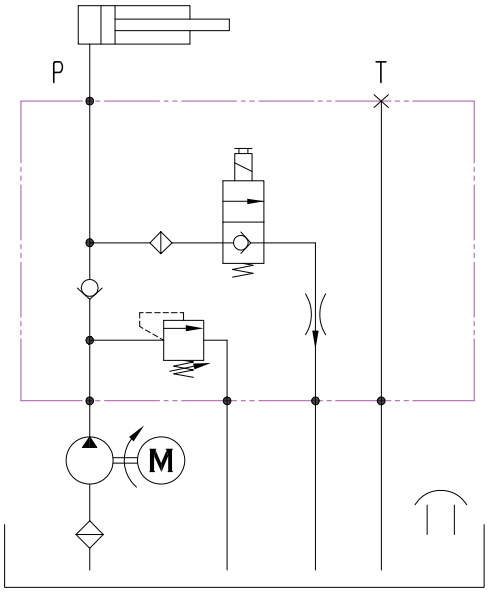

Hydraulic Circuit

Application - *SCISSOR LIFT*

TYPICAL TYPE

- TAIL LIFT ①

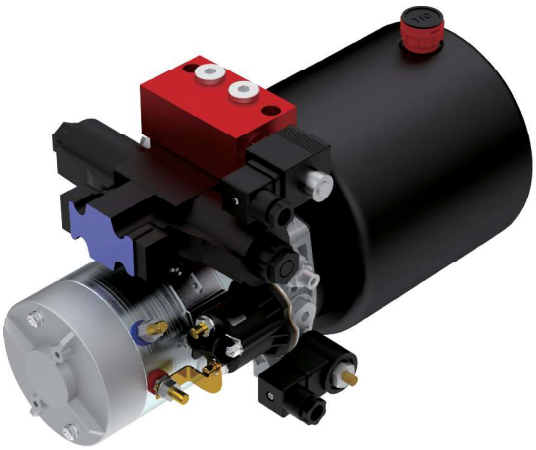

Description

- One single one double acting:
  Open → Gravity down → Power up
  → Close
- Cetop 3 Directional valve
- Pressure compensated fixed control valve
- DC 12V/24V 5.2 LPM @ 180 BAR

Power Pack for *TAIL LIFT ①*

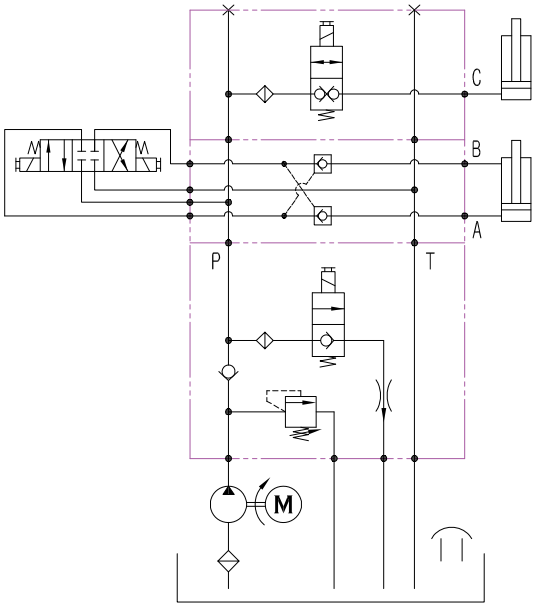

Hydraulic Circuit

Application - *TAIL LIFT ①*

TYPICAL TYPE

- TAIL LIFT ②

Description

- One single one double acting:
  Open → Gravity down → Power up
  → Close
- Light weight – Plastic cover and tank
- DC 12V/24V 4 LPM @ 200 BAR

Power Pack for *TAIL LIFT ②*

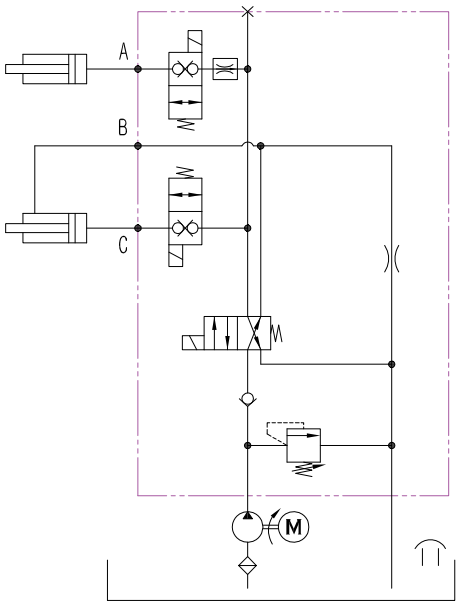

Hydraulic Circuit

Application - *TAIL LIFT ②*

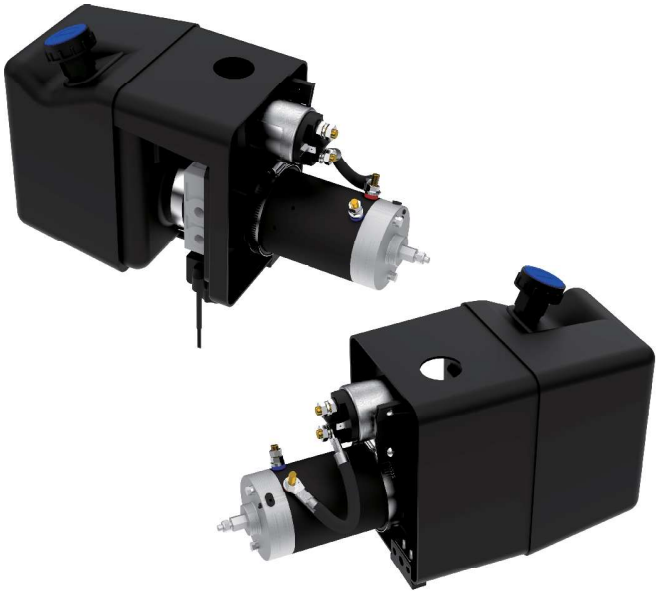

Description

- One single one double acting:
  Open → Gravity down → Power up → Close
- Light weight – Plastic cover and tank
- DC 12V/24V 2 LPM @ 200 BAR

Power Pack for *TAIL LIFT ③*

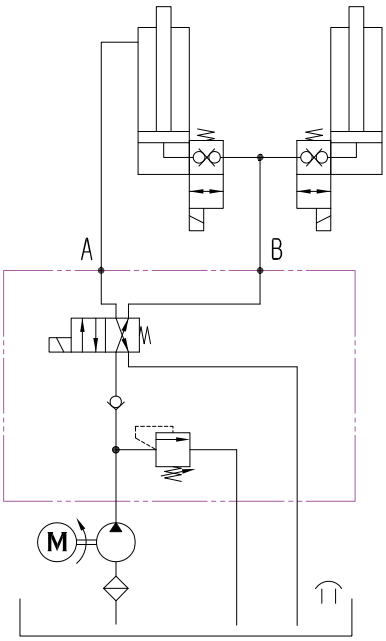

Hydraulic Circuit

Application - *TAIL LIFT ③*

TYPICAL TYPE

- AERIAL WORK PLATFORM

Description

- Single acting :
  Power up – Hold – Gravity down
- Manual lowering valve (option)
- Pressure compensated adjustable control valve
- DC 12V/24V 5 LPM @ 200 BAR

Power Pack for *AERIAL WORK PLATFORM*

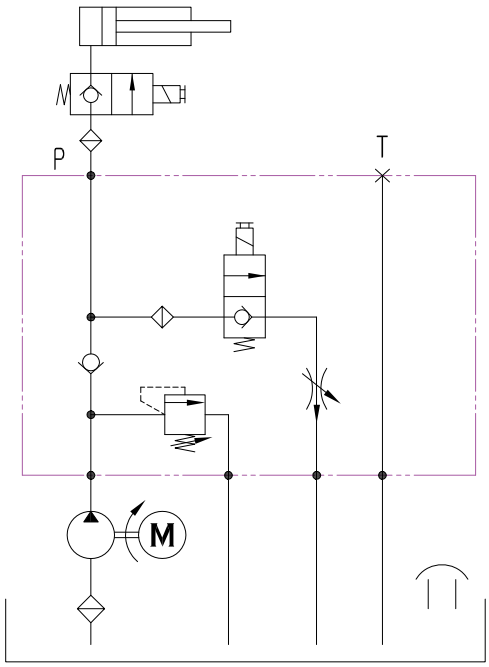

Hydraulic Circuit

Application - *AERIAL WORK PLATFORM*

TYPICAL TYPE - SCISSOR LIFT

Description

- Double acting:
  Power up – Hold – Power down
- Fixed flow control valve
- Overload protection & Emergency valve
- Max Force 25,000(N)
- AC & DC motor (300W & 500W)

Power Pack for *SCISSOR LIFT*

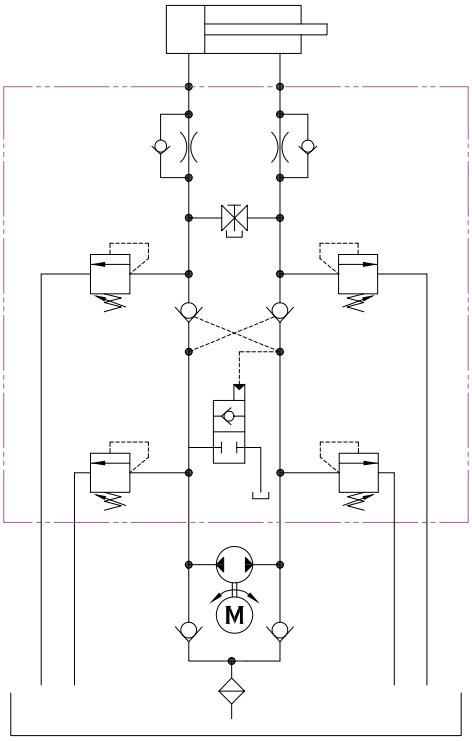

Hydraulic Circuit

Application - *SCISSOR LIFT*

TYPICAL TYPE - *SOLAR PANEL*

Description

- Two double acting :
  Power up – Hold – Power down
- DO3 directional valve
- AC motor 1 LPM @ 100 BAR

Power Pack for *SOLAR PANEL*

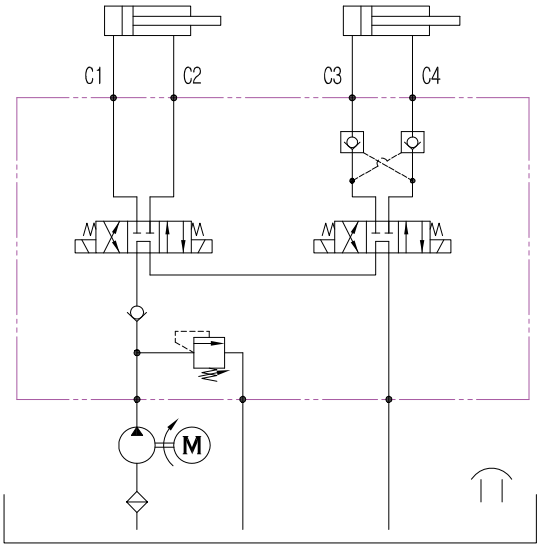

Hydraulic Circuit

Application - *SOLAR PANEL*

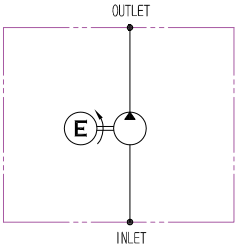

< 6 HP ENGINE PEU >

Description

- PEU (Pump Engine Unit)
- Compatible with Hydro-tek center block
- 6 HP MAX 9 LPM @ 200 BAR
- 13 HP MAX 14 LPM @ 200 BAR

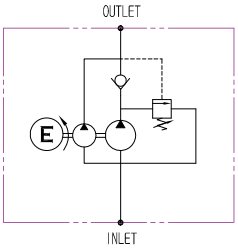

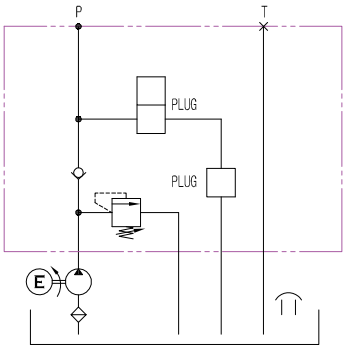

< 13 HP ENGINE PEU >

< 6 HP ENGINE PACK >

< 13 HP ENGINE PACK >

STANDARD ITEM CODE

MOTOR

CENTER BLOCK

PUMP

MOUNTING

OIL TANK

SOLENOID VALVE & COIL

CONTROL VALVE

DIRECTIONAL SANDWICH BLOCK

DIRECTIONAL VALVE

SOLENOID SANDWICH VALVE

OTHERS & SPECIAL POWER PACK

PENDENT & BUTTON SWITCH

PUMP & MOTOR UNIT

OTHERS

BELT-DRIVEN POWER PACK

SUBMERSIBLE POWER PACK

DOCK LEVELER POWER PACK

WHEEL CHAIR LIFT POWER PACK

DAU-SERIES PLASTIC POWER PACK

ENGINE PEU & PACK

JAW COUPLING PACK

JAW COUPLING UNIT

CODING INDEX

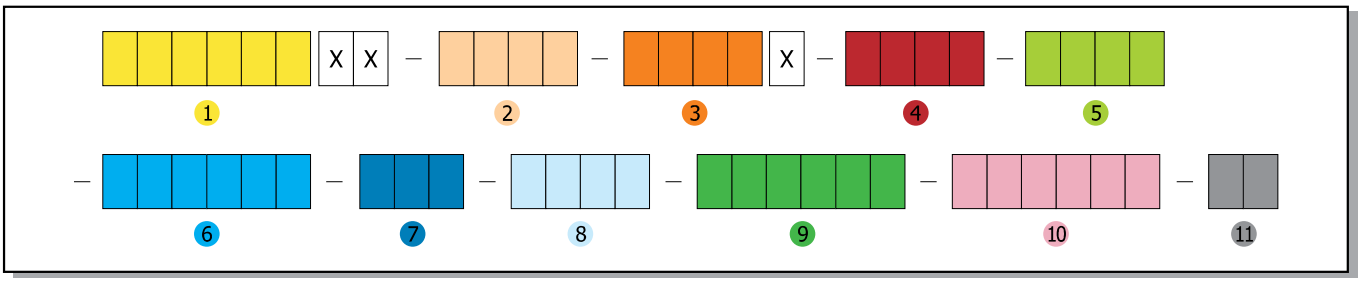

** No.1 ~ No.11 : Code for building power pack

** No. 12 ~ No.23 : Code for special power pack & accessories

** X, XX : Brand

HOW TO ORDER

T41556XX	– XA5C	– G021X	– HPCB	– XR05
①	②	③	④	⑤

– SC48XN	– F04	– BH31	– YA411	– D148XN	– XX
⑥	⑦	⑧	⑨	⑩	⑪

AC - Power pack ordering code example	DC - Power pack ordering code example
① Motor : AC 3phase - 230/400V - 4pole - 1.5kW - 50/60Hz	DC 24V - 2.2kW - Start relay 24V, 150A
② Center block : 'XA' Center block - Diagram No.5 - Relief valve (setting pressure 180bar)	'XA' Center block - Diagram No.1 - Relief valve (setting pressure 180bar)
③ Pump : Gear pump one group - 2.1cc/rev	Gear pump one group - 2.1cc/rev
④ Mounting : Horizontal mounting - Air breather position is to P,T ports. - Terminal box position is to cartridge- With bracket	Horizontal mounting - Air breather position is to P,T ports. Start relay position is to cartridge - Without bracket
⑤ Oil tank : Steel material - 'X' center block & Round type - Capacity 5ℓ	Plastic material - 'X' center bolck & Square type - Capacity 6ℓ
⑥ Built-in : Solenoid valve (normally closed) - AC 220V - '08' Cavity - Din connector	Blank
⑦ Pressure compensated fixed flow control valve : 4 ℓ/min	Blank
⑧ Directional sandwich block (for double acting cylinder) : Block for Cetop 3 valve	Block for Cetop 3 valve - Quantity 2pcs
⑨ Directional valve : 'YA' diagram - AC 220V - CETOP 3 - 'BOX' type	'YA' diagram - DC 24V - CETOP 3 - Quantity 2pcs - 'BOX' type
⑩ Solenoid sandwich valve (for single acting cylinder) : One single acting cylinder - AC 220V - Din connector	Blank
⑪ Unit Box : Blank	Sus box - 'WR' type

D222T2XX	– XA1C	– G021X	– HPCX	– PL06
①	②	③	④	⑤

– XXXXXX	– XXX	– BYF2	– YA221	– XXXXXX	– WR
⑥	⑦	⑧	⑨	⑩	⑪

Hydraulic oil specification

Type : Mineral based hydraulic oil (HM or HV)

Viscosity : ISO VG22 to 46 (Ambient > 0℃) ISO VG15 (Ambient < 0℃)

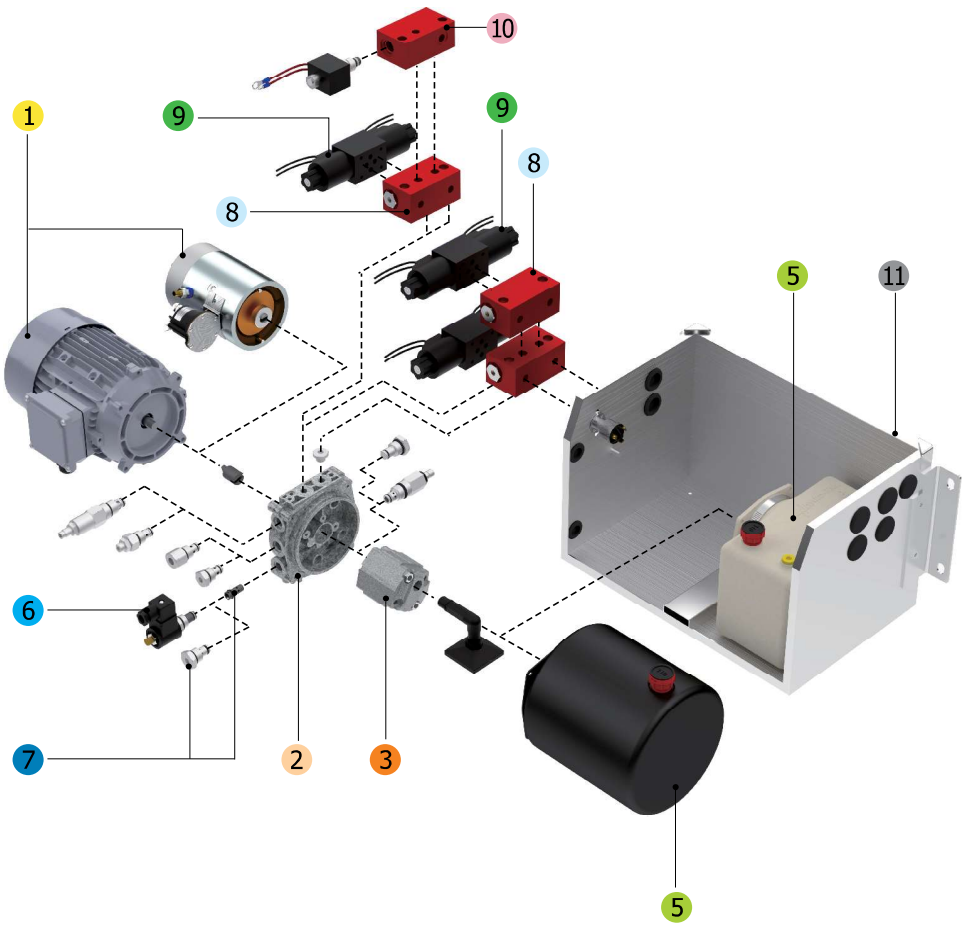

One single acting & one double acting

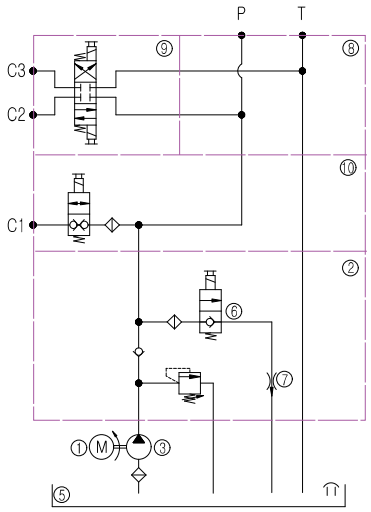

Two double acting

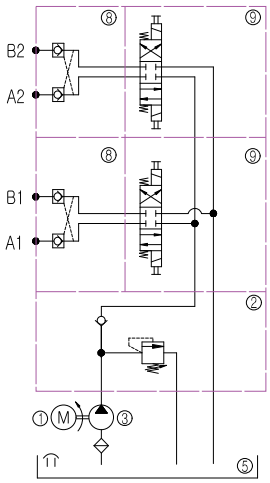

1 [ ][ ][ ][ ][ ][ ] [X] [T]
A/ B/ C / D Brand Thermal Switch

DC-MOTOR

A	ITEM CODE	XXX	D	M	L
	TYPE	Without motor	Non-ventilation direct current motor	Bi-directional DC permanent magnetic motor	Ventilation direct current motor

B	ITEM CODE	1	A	2	B	4
	FLANGE	Without	With	Without	With	Without
	VOLTAGE (V)	12		24		48
	APPLICABLE POWER	800W, 1300W, 1600W, 2000W, 2400W		800W, 1300W, 2200W, 3000W		2000W

C	ITEM CODE	08	13	16	20	22	24	30
	POWER(W)	800	1300	1600	2000	2200	2400	3000

D	START RELAY	Please refer to page 46 for start relay code

Note. Above B section *(Flange or Non flange)* is related to only 800W motors.

DC - Motor code & Information

CODE	VOLTAGE (V)	POWER (W)	INSULATION CLASS	ROTATION	FLANGE
M108	12	800	F	↔	Without
M208	24	800	F	↔	Without
MA08	12	800	F	↔	With
MB08	24	800	F	↔	With
D108	12	800	F	→	Without
D208	24	800	F	→	Without
DA08	12	800	F	→	With
DB08	24	800	F	→	With
D113	12	1300	F	→	Without
D213	24	1300	F	→	Without
D116	12	1600	F	→	Without
D116-G	12	1600	F	→	Without
D222	24	2200	F	→	Without
D222-G	24	2200	F	→	Without
D120	12	2000	F	→	Without
D420	48	2000	F	→	Without
D124	12	2400	F	→	With
D230	24	3000	F	→	With
L116	12	1600	F	→	With
L222	24	2200	F	→	With
L230	24	3000	F	→	With

Note. 1. Rotation : View from shaft.
2. Motor protection grade is based on completed power pack of catalog.
In case of take as part then the grade level will reduce as 1.

1 | M | 1 | 0 | 8 | X | X | X | T

A / B / C / D Brand Thermal Switch

DC-MOTOR

TECHNICAL DATA

APPLICABLE CENTER BLOCK **SH, SD** Series & **DAU1**

ITEM CODE	VOLTAGE (V)	POWER (W)	RATED CURRENT (A)	DUTY CYCLES S2min - S3%	INSULATION CLASS	PROTECTION GRADE	NUMBER OF TERMINALS	ROTATION	WEIGHT (kg)
M108XXM	12	800	125	1.8min-7%ED	F	IP 54	2	↔	3.6
M108XXR	12	800	130	1.8min-7%ED	F	IP 54	2	↔	3

OVERALL DIMENSION

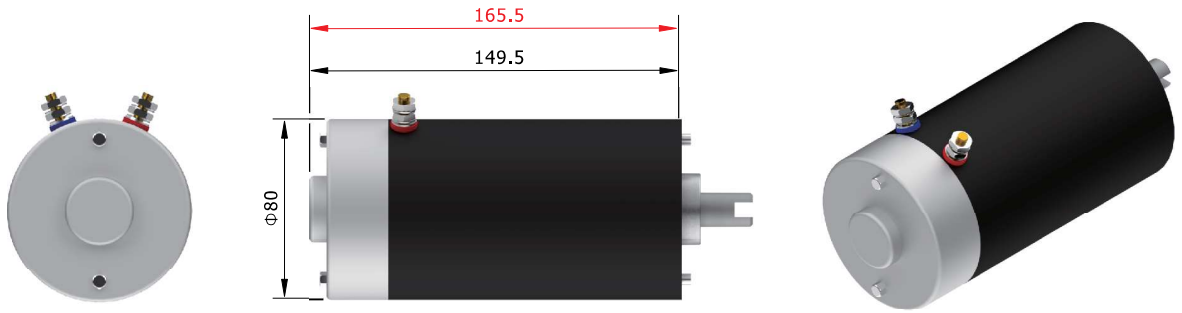

MOUNTING DIMENSION

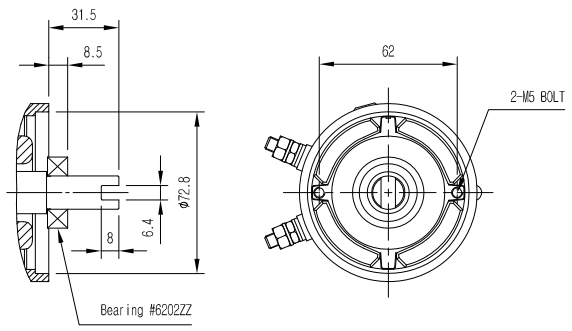

WIRING DIAGRAM

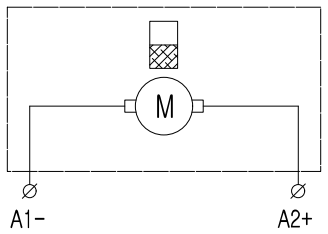

PERFORMANCE CURVE

Flow versus Pressure for M108 Motor

Test Fluid
35℃ (46 cst)

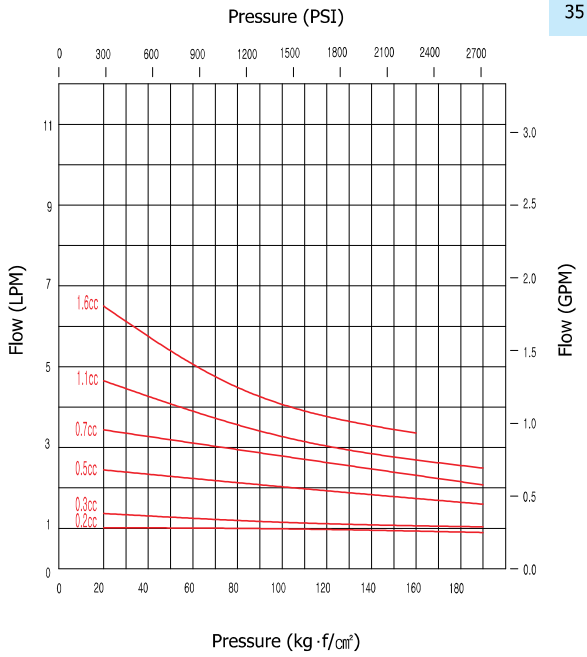

Current versus pressure for M108 Motor

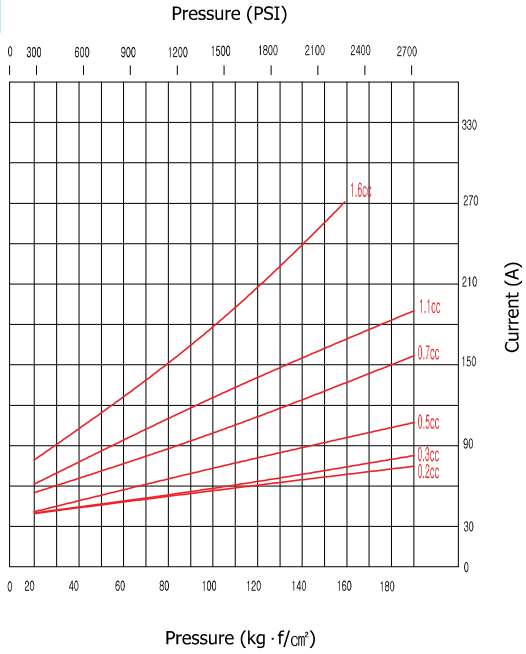

1	M	2	0	8	X	X	X	T
	A /	B /	C	/	D		Brand	Thermal Switch

DC-MOTOR

TECHNICAL DATA

APPLICABLE CENTER BLOCK **SH, SD** Series & **DAU1**

ITEM CODE	VOLTAGE (V)	POWER (W)	RATED CURRENT (A)	DUTY CYCLES S2min - S3%	INSULATION CLASS	PROTECTION GRADE	NUMBER OF TERMINALS	ROTATION	WEIGHT (kg)
M208XXM	24	800	65	1.8min-7%ED	F	IP 54	2	↔	3.6
M208XXR	24	800	70	1.8min-7%ED	F	IP 54	2	↔	3

OVERALL DIMENSION

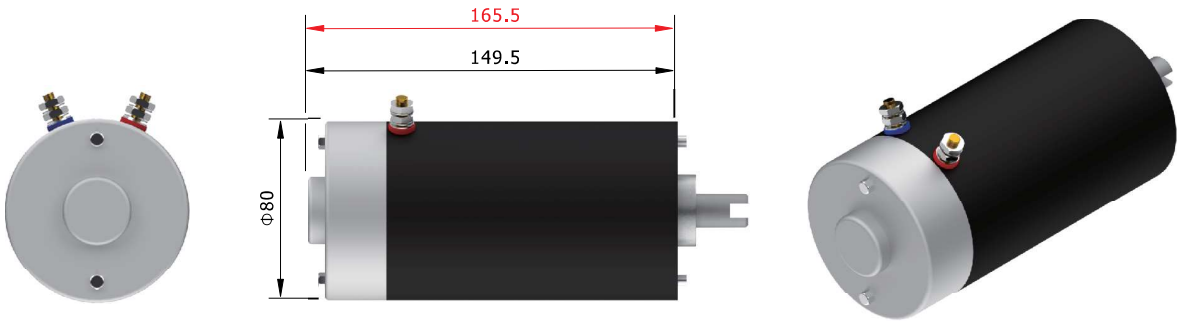

MOUNTING DIMENSION

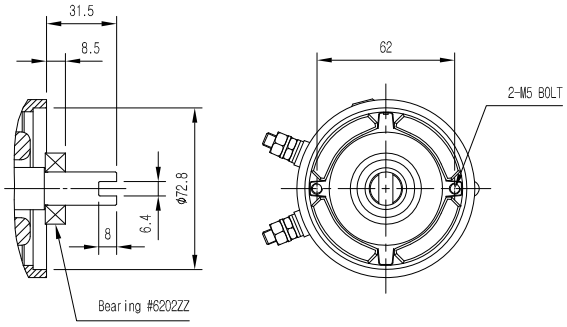

WIRING DIAGRAM

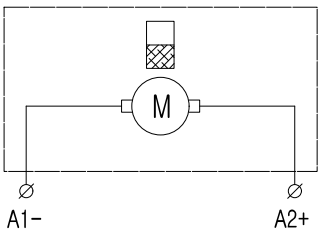

PERFORMANCE CURVE

Flow versus pressure for M208 Motor

Current versus pressure for M208 Motor

Test Fluid
35℃ (46 cst)

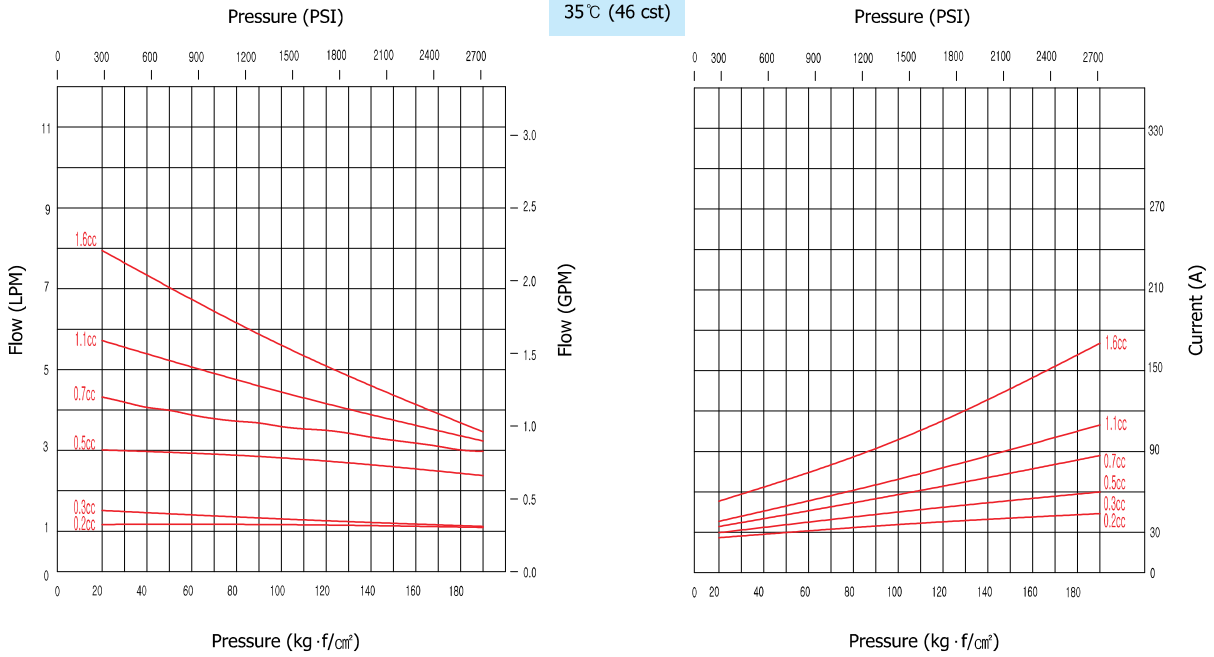

1 | M | A | 0 | 8 | X | X | X | T

A / B / C / D Brand Thermal Switch

DC-MOTOR

TECHNICAL DATA

APPLICABLE CENTER BLOCK **X, C, D, T, QH, QD** series

ITEM CODE	VOLTAGE (V)	POWER (W)	RATED CURRENT (A)	DUTY CYCLES S2min - S3%	INSULATION CLASS	PROTECTION GRADE	NUMBER OF TERMINALS	ROTATION	WEIGHT (kg)
MA08XXM	12	800	125	1.8min-7%ED	F	IP 54	2	⟷	4.0
MA08XXR	12	800	130	1.8min-7%ED	F	IP 54	2	⟷	3.4

OVERALL DIMENSION

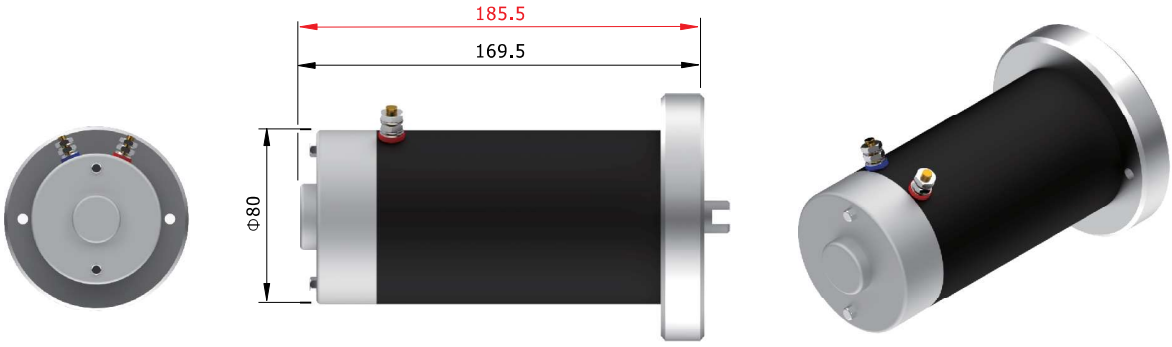

MOUNTING DIMENSION

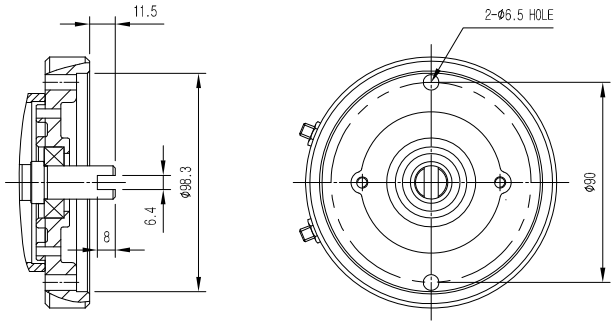

WIRING DIAGRAM

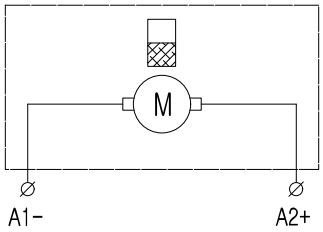

PERFORMANCE CURVE

Flow versus Pressure for MA 08 Motor

Current versus pressure for MA 08 Motor

Test Fluid
35℃ (46 cst)

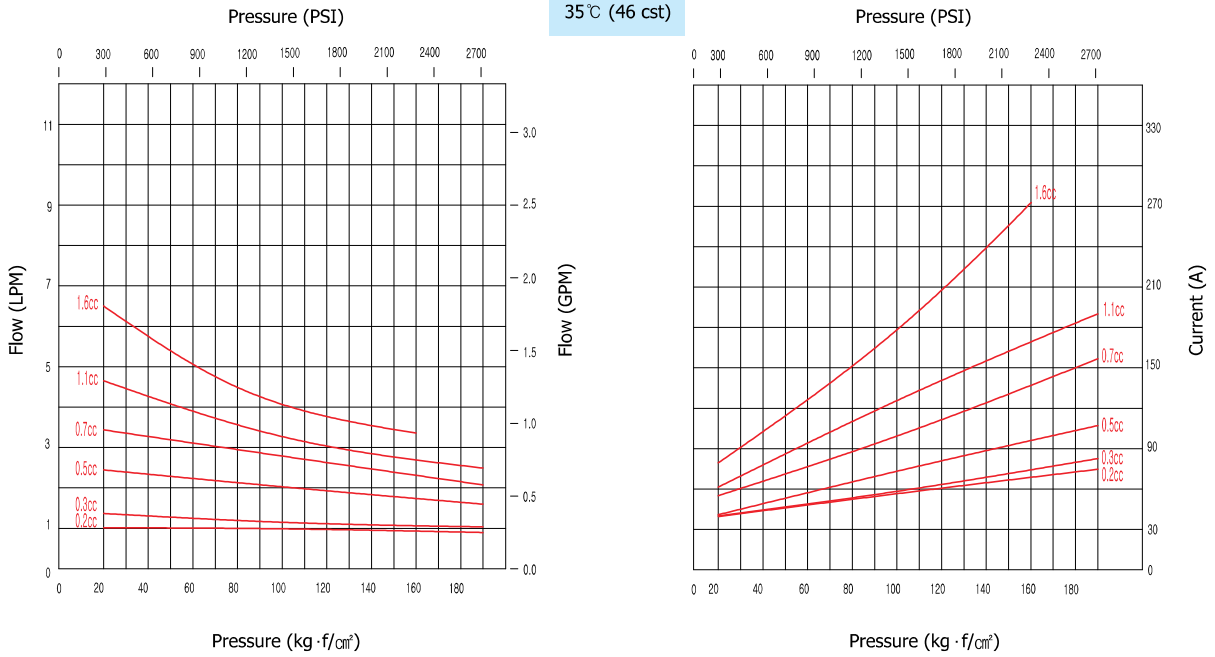

1 | M | B | 0 | 8 | X | X | X | T

A / B / C / D Brand Thermal Switch

DC-MOTOR

TECHNICAL DATA

APPLICABLE CENTER BLOCK **X, C, D, T, QH, QD** series

ITEM CODE	VOLTAGE (V)	POWER (W)	RATED CURRENT (A)	DUTY CYCLES S2min - S3%	INSULATION CLASS	PROTECTION GRADE	NUMBER OF TERMINALS	ROTATION	WEIGHT (kg)
MB08XXM	24	800	65	1.8min-7%ED	F	IP 54	2	↔	4.0
MB08XXR	24	800	70	1.8min-7%ED	F	IP 54	2	↔	3.4

OVERALL DIMENSION

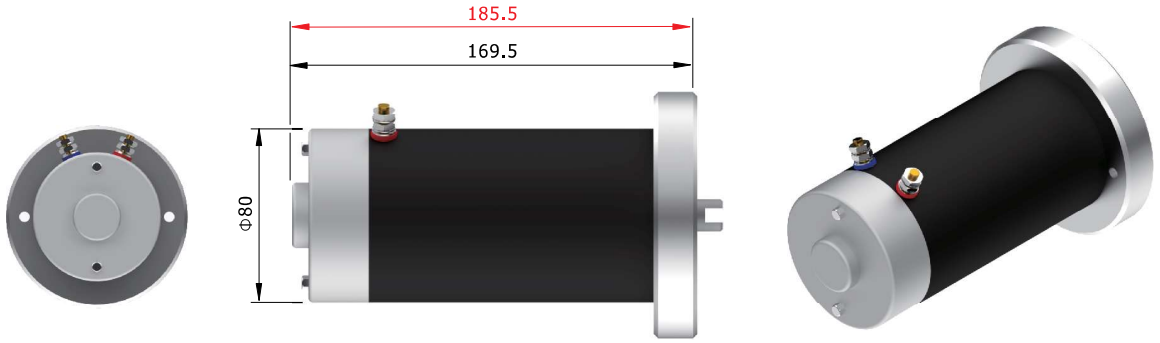

MOUNTING DIMENSION

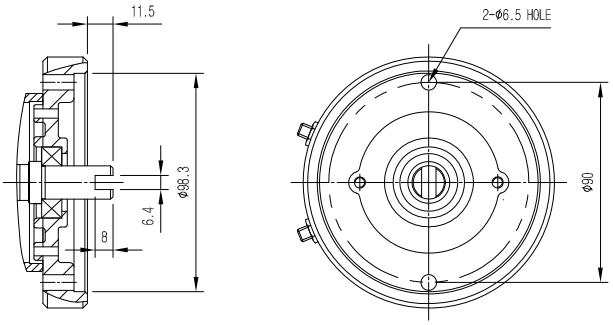

WIRING DIAGRAM

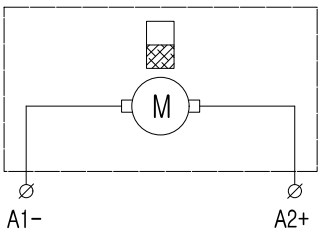

PERFORMANCE CURVE

Flow versus pressure for MB08 Motor

Test Fluid
35℃ (46 cst)

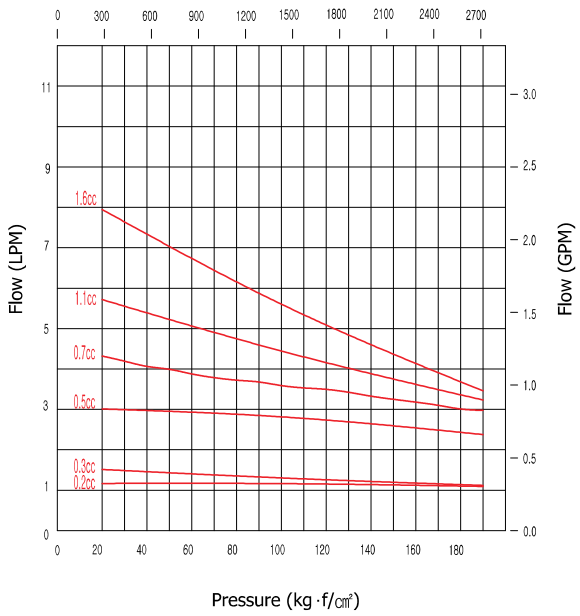

Current versus pressure for MB08 Motor

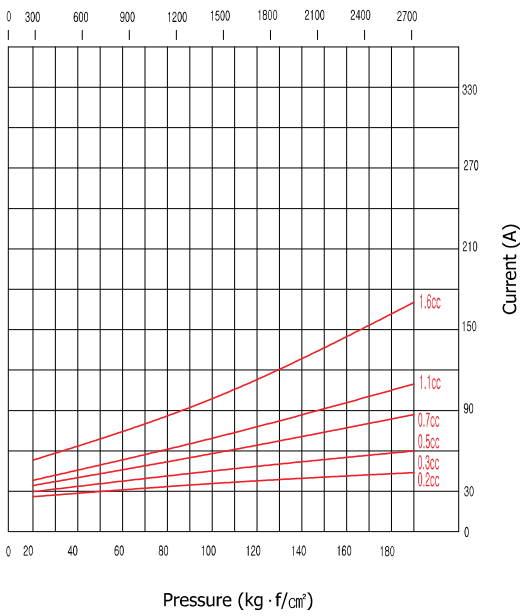

1	D	1	0	8	X	X	X	T
	A /	B /	C	/	D		Brand	Thermal Switch

DC-MOTOR

TECHNICAL DATA

ITEM CODE	APPLICABLE CENTER BLOCK
D108	**SH, DAU1** series

VOLTAGE (V)	POWER (W)	RATED CURRENT (A)	DUTY CYCLES S2min - S3%	INSULATION CLASS	PROTECTION GRADE	NUMBER OF TERMINALS	ROTATION	WEIGHT (kg)
12	800	110	2min-8%ED	F	IP 54	2	C.W. →	3.1

OVERALL DIMENSION

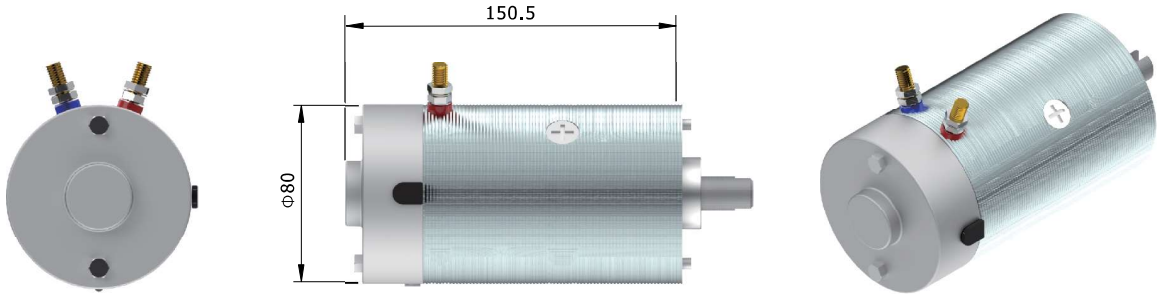

MOUNTING DIMENSION

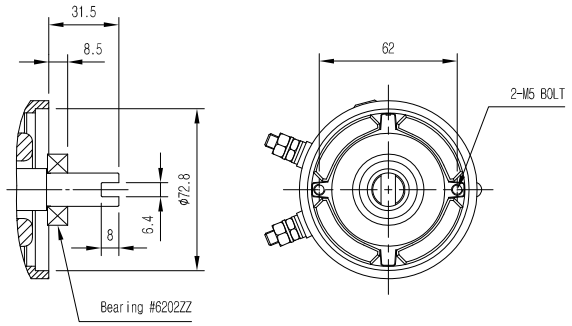

WIRING DIAGRAM

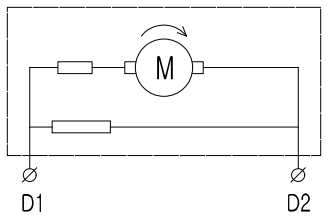

PERFORMANCE CURVE

Flow versus pressure for D108 Motor

Current versus pressure for D108 Motor

Test Fluid
35℃ (46 cst)

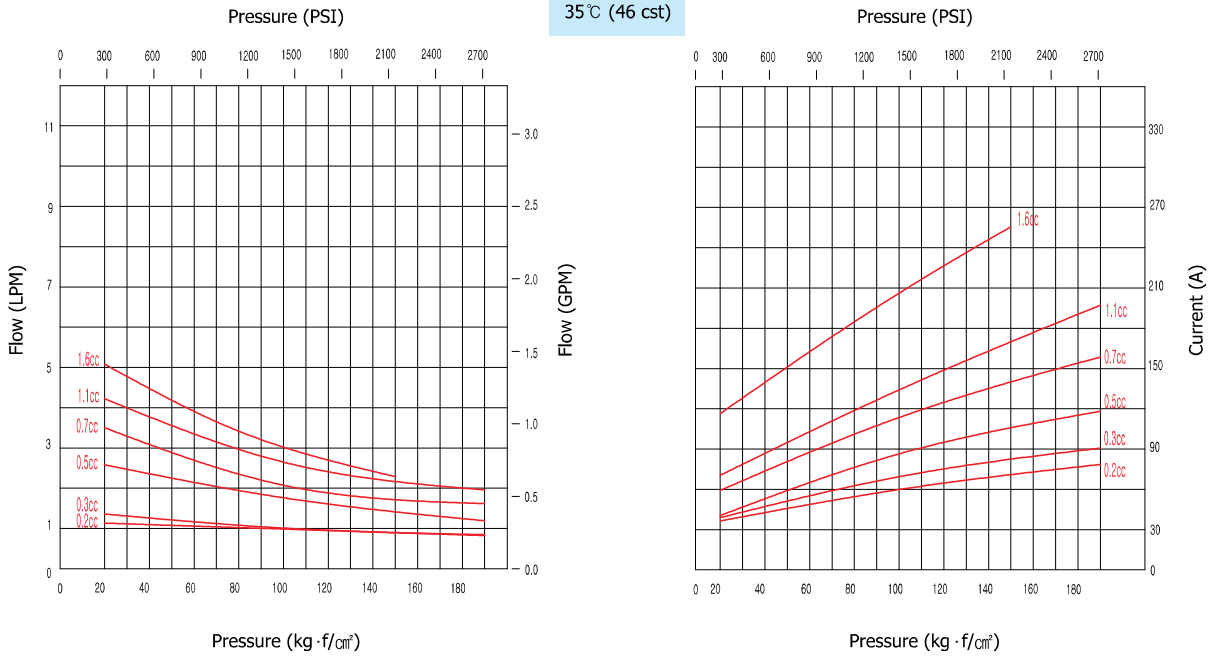

1	D	2	0	8	X	X	X	T
	A /	B /	C	/	D		Brand	Thermal Switch

DC-MOTOR

TECHNICAL DATA

ITEM CODE	APPLICABLE CENTER BLOCK
D208	**SH, DAU1** series

VOLTAGE (V)	POWER (W)	RATED CURRENT (A)	DUTY CYCLES S2min - S3%	INSULATION CLASS	PROTECTION GRADE	NUMBER OF TERMINALS	ROTATION	WEIGHT (kg)
24	800	55	2min-8%ED	F	IP 54	2	C.W. →	3.1

OVERALL DIMENSION

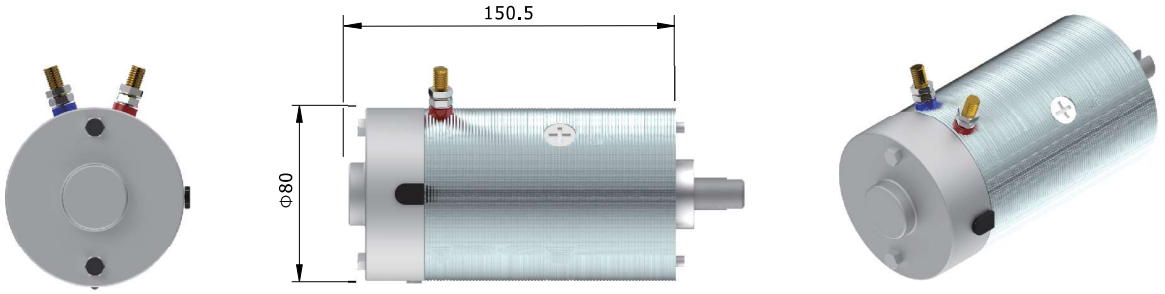

MOUNTING DIMENSION

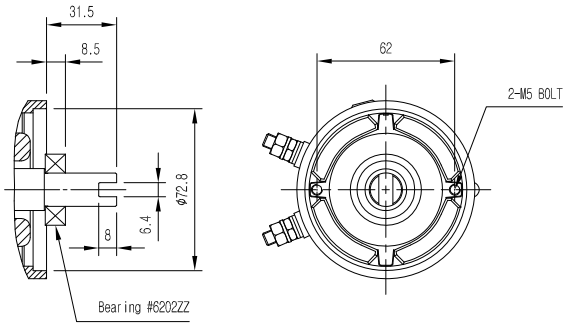

WIRING DIAGRAM

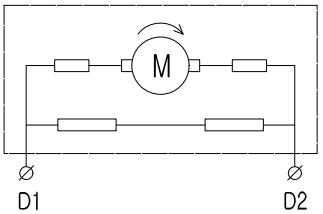

PERFORMANCE CURVE

Flow versus pressure for D208 Motor

Current versus pressure for D208 Motor

Test Fluid
35℃ (46 cst)

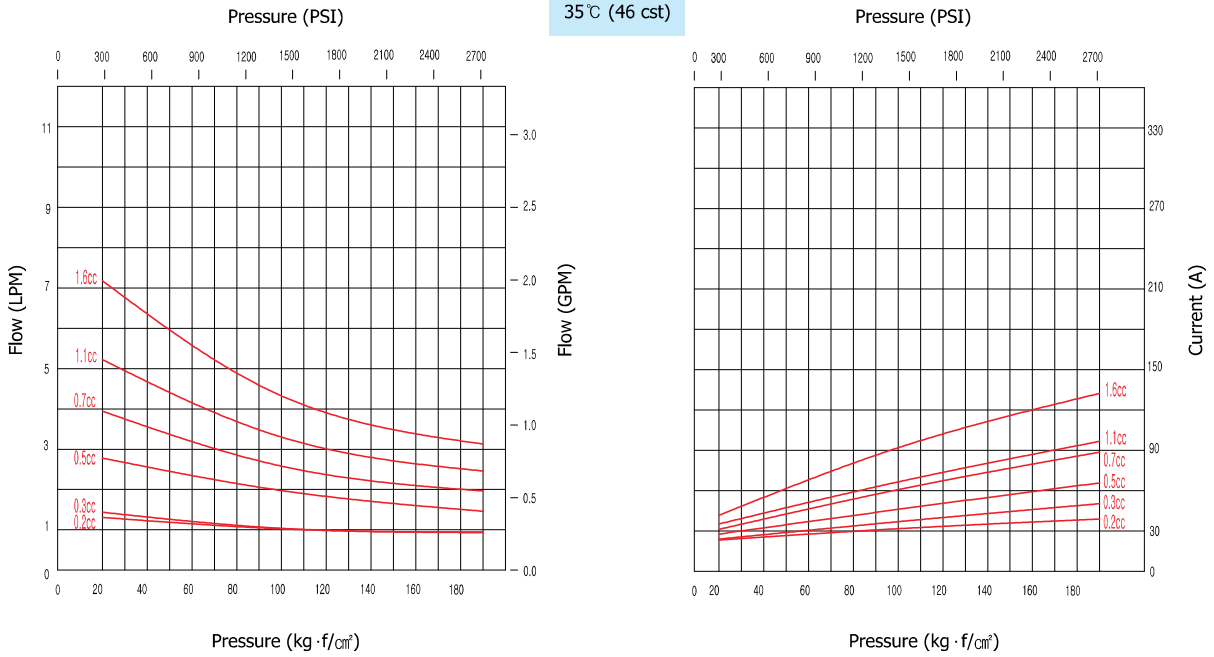

1 D A 0 8 X X X T

A / B / C / D Brand Thermal Switch

DC-MOTOR

TECHNICAL DATA

ITEM CODE	APPLICABLE CENTER BLOCK
DA08	**X, C, D, T, QH** series

VOLTAGE (V)	POWER (W)	RATED CURRENT (A)	DUTY CYCLES S2min - S3%	INSULATION CLASS	PROTECTION GRADE	NUMBER OF TERMINALS	ROTATION	WEIGHT (kg)
12	800	110	2min-8%ED	F	IP 54	2	C.W. →	3.5

OVERALL DIMENSION

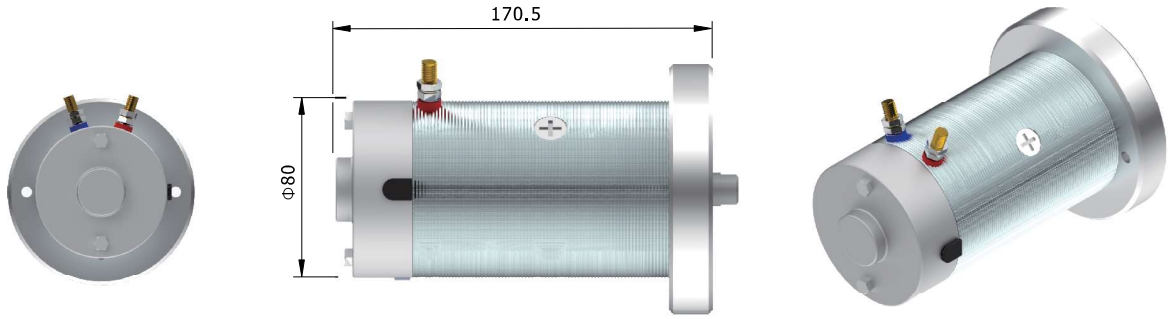

MOUNTING DIMENSION

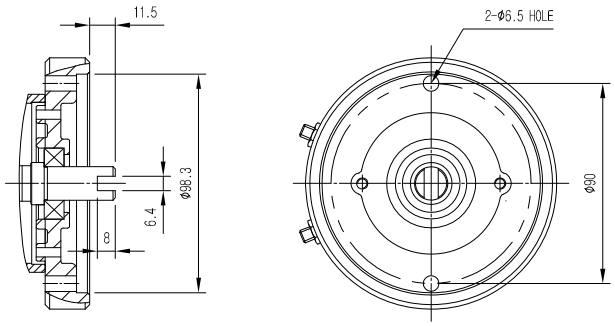

WIRING DIAGRAM

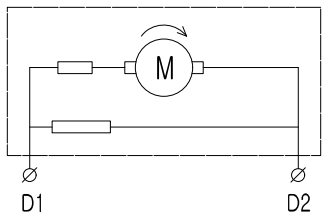

PERFORMANCE CURVE

Flow versus pressure for DA08 Motor

Current versus pressure for DA08 Motor

Test Fluid
35℃ (46 cst)

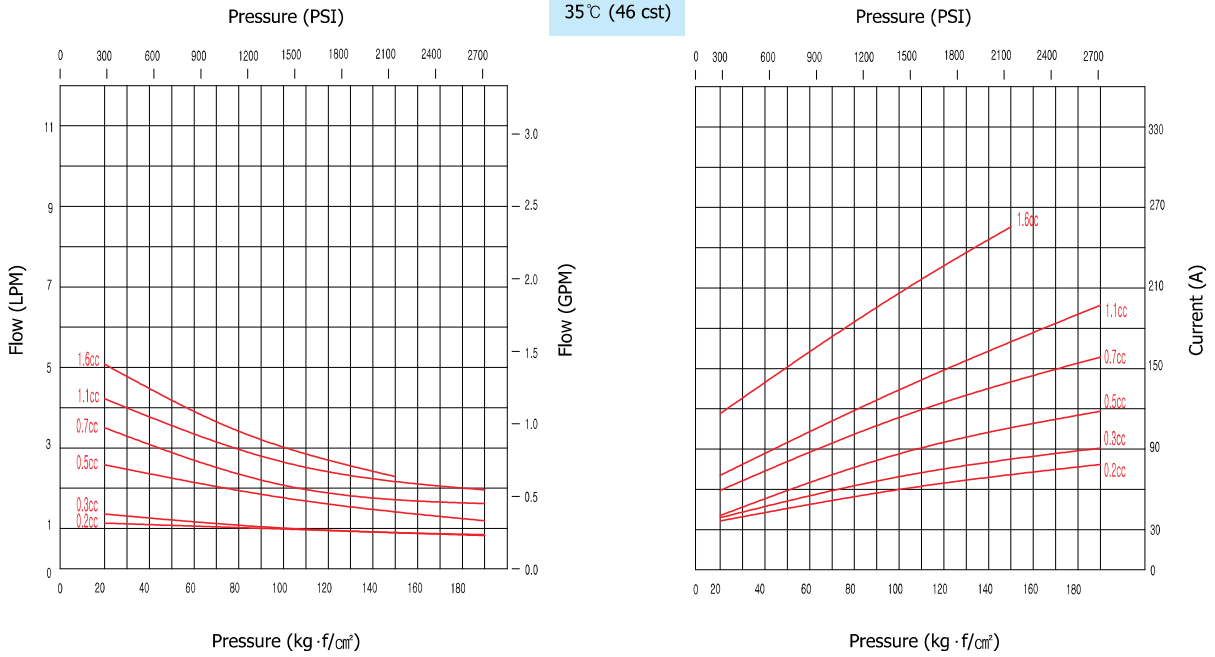

1	D	B	0	8	X	X	X		T
	A /	B /	C	/	D		Brand		Thermal Switch

DC-MOTOR

TECHNICAL DATA

ITEM CODE	APPLICABLE CENTER BLOCK
DB08	**X, C, D, T, QH** series

VOLTAGE (V)	POWER (W)	RATED CURRENT (A)	DUTY CYCLES S2min - S3%	INSULATION CLASS	PROTECTION GRADE	NUMBER OF TERMINALS	ROTATION	WEIGHT (kg)
24	800	55	2min-8%ED	F	IP 54	2	C.W. →	3.5

OVERALL DIMENSION

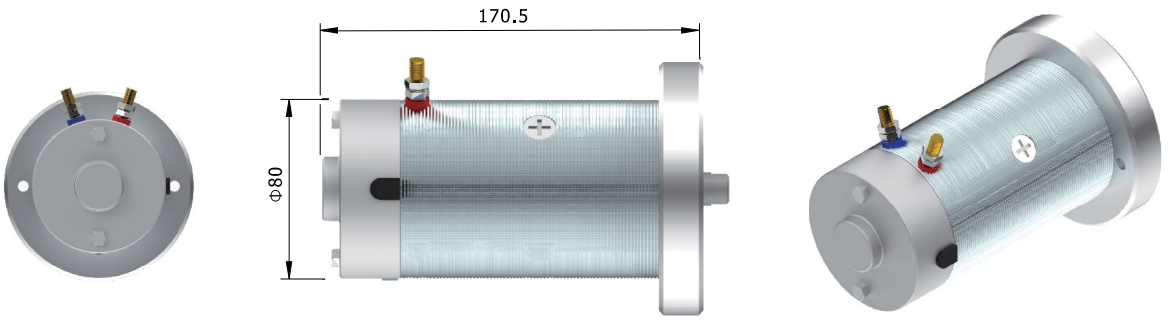

MOUNTING DIMENSION

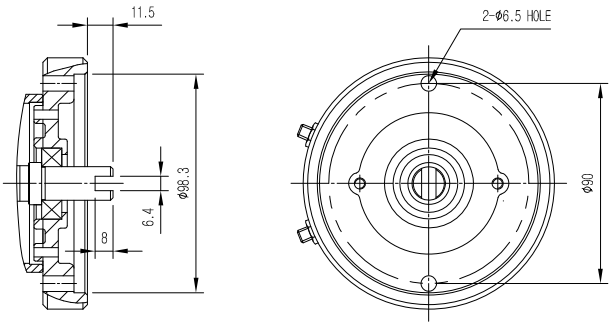

WIRING DIAGRAM

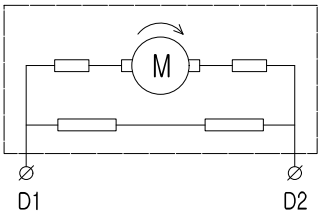

PERFORMANCE CURVE

Flow versus pressure for DB08 Motor

Test Fluid
35℃ (46 cst)

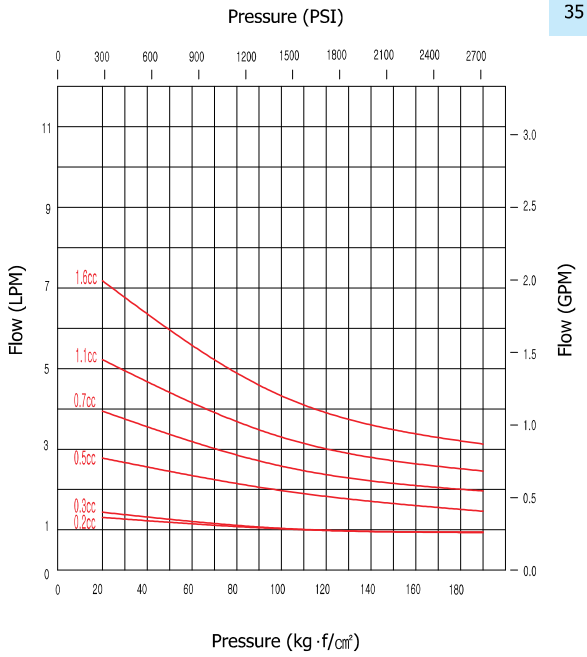

Current versus pressure for DB08 Motor

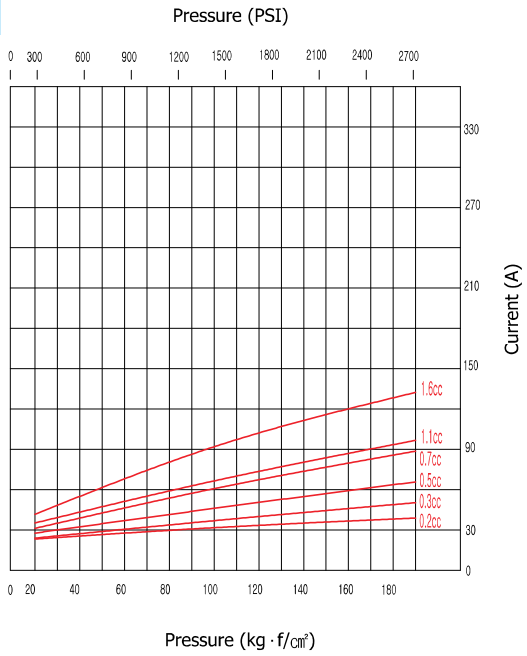

1	D	1	1	3	X	X	X	T
	A /	B /	C	/	D		Brand	Thermal Switch

DC-MOTOR

TECHNICAL DATA

ITEM CODE	APPLICABLE CENTER BLOCK
D113	**X, C, D, T, QH** series

VOLTAGE (V)	POWER (W)	RATED CURRENT (A)	DUTY CYCLES S2min - S3%	INSULATION CLASS	PROTECTION GRADE	NUMBER OF TERMINALS	ROTATION	WEIGHT (kg)
12	1300	180	1.2min-4.5%ED	F	IP 54	2	C.W. →	5.1

OVERALL DIMENSION

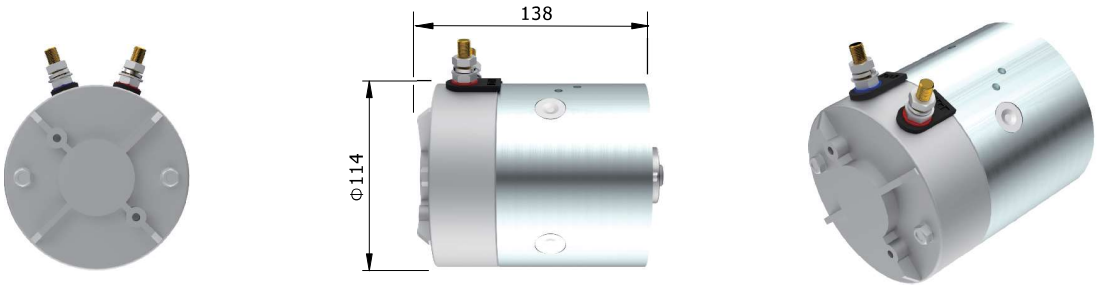

MOUNTING DIMENSION

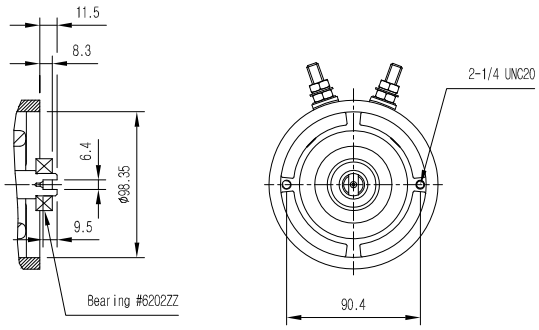

WIRING DIAGRAM

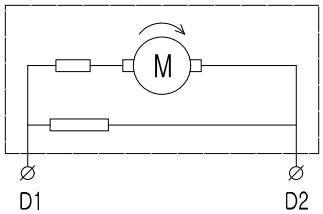

PERFORMANCE CURVE

Flow versus pressure for D113 Motor

Test Fluid
35℃ (46 cst)

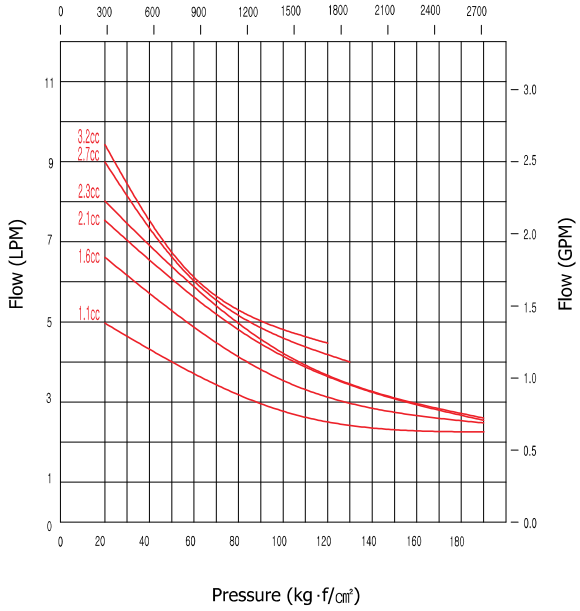

Current versus pressure for D113 Motor

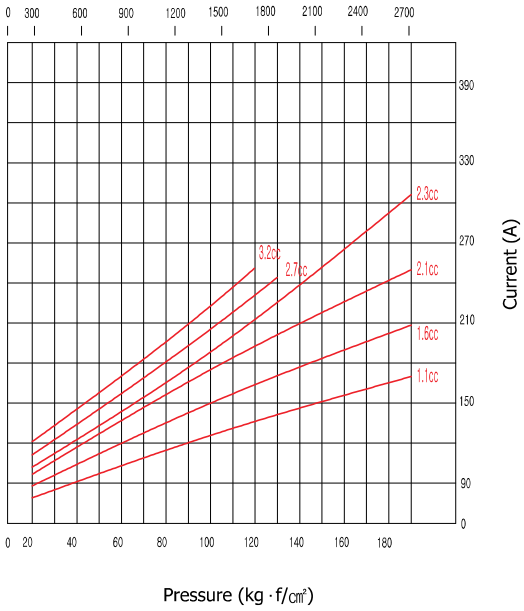

1 D 2 1 3 X X X T
A / B / C / D Brand Thermal Switch

DC-MOTOR

TECHNICAL DATA

ITEM CODE	APPLICABLE CENTER BLOCK
D213	X, C, D, T, QH series

VOLTAGE (V)	POWER (W)	RATED CURRENT (A)	DUTY CYCLES S2min - S3%	INSULATION CLASS	PROTECTION GRADE	NUMBER OF TERMINALS	ROTATION	WEIGHT (kg)
24	1300	90	1.2min-4.5%ED	F	IP 54	2	C.W. →	5.1

OVERALL DIMENSION

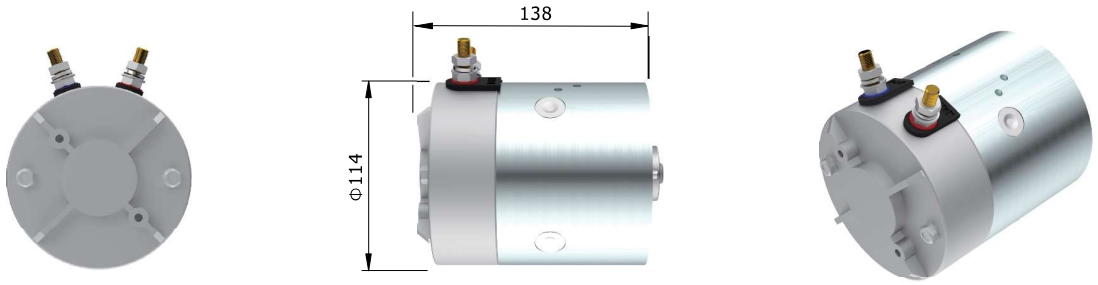

MOUNTING DIMENSION

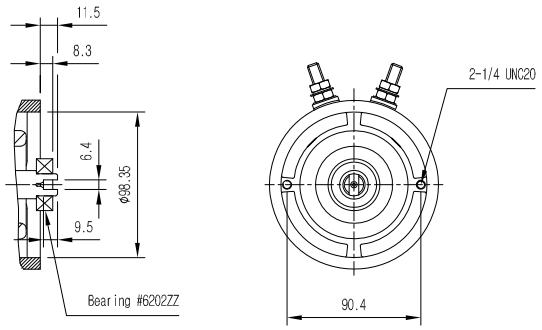

WIRING DIAGRAM

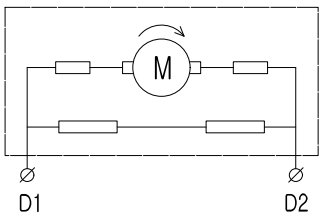

PERFORMANCE CURVE

Flow versus pressure for D213 Motor

Test Fluid
35℃ (46 cst)

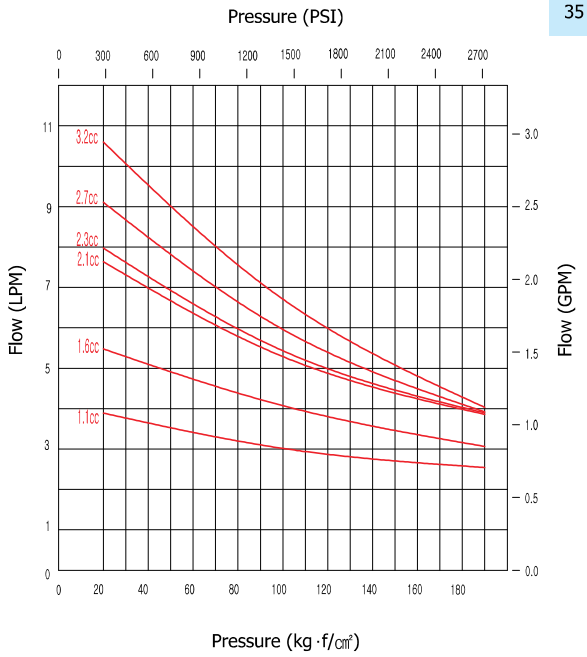

Current versus pressure for D213 Motor

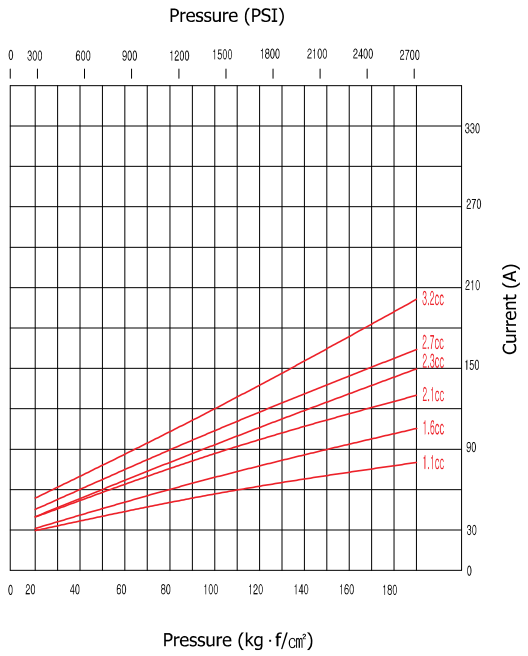

1	D	1	1	6	X	X	G	T
	A /	B /	C	/	D		Brand	Thermal Switch

DC-MOTOR

TECHNICAL DATA

ITEM CODE	APPLICABLE CENTER BLOCK
D116	**X, C, D, T, QH** series

VOLTAGE (V)	POWER (W)	RATED CURRENT (A)	DUTY CYCLES S2min - S3%	INSULATION CLASS	PROTECTION GRADE	NUMBER OF TERMINALS	ROTATION	WEIGHT (kg)
12	1600	200	4min - 8%ED	F	IP 54	2	C.W. →	6.9

OVERALL DIMENSION

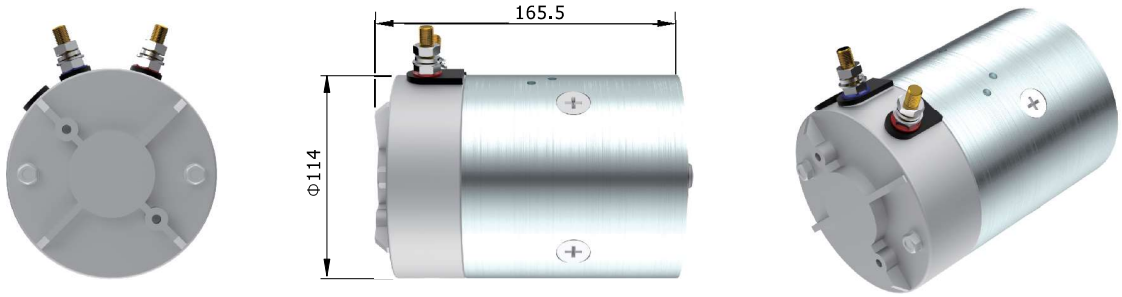

MOUNTING DIMENSION

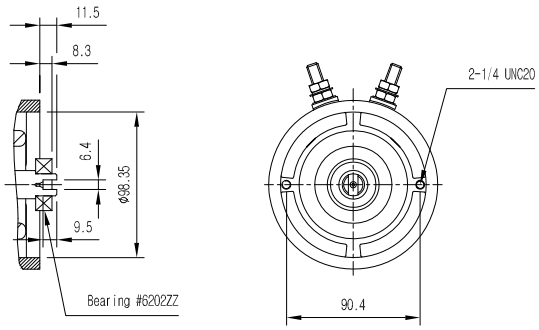

WIRING DIAGRAM

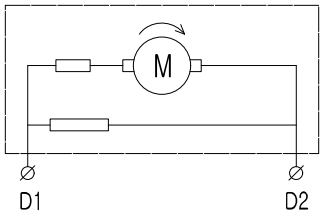

PERFORMANCE CURVE

Flow versus pressure for D116 Motor

Test Fluid
35℃ (46 cst)

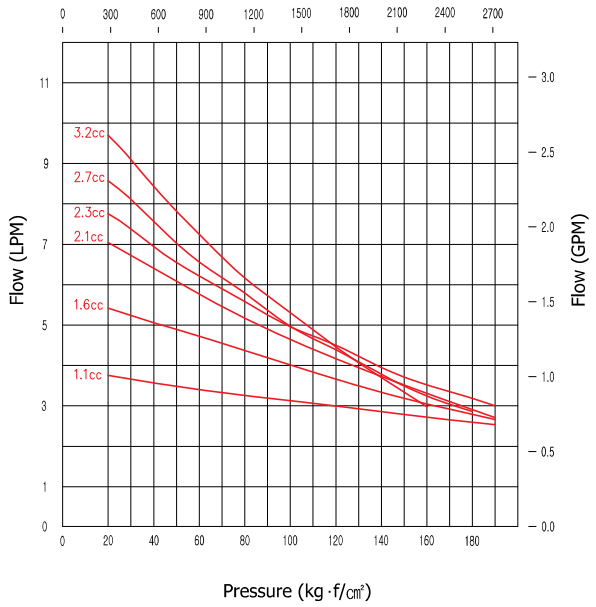

Current versus pressure for D116 Motor

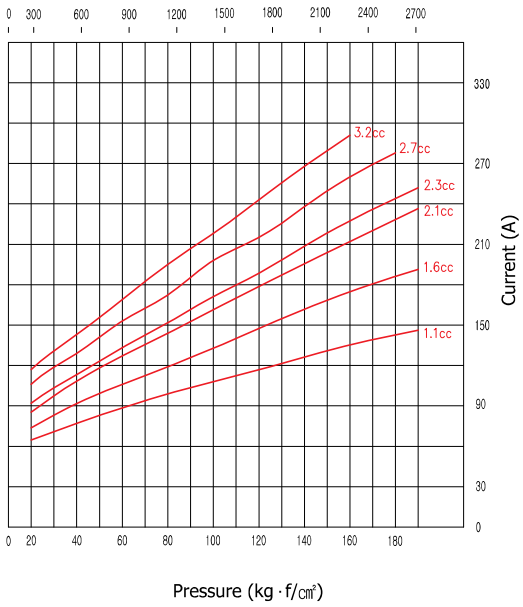

1 D 1 1 6 X X M T

A / B / C / D Brand Thermal Switch

DC-MOTOR

TECHNICAL DATA

ITEM CODE	APPLICABLE CENTER BLOCK
D116	**X, C, D, T, QH** series

VOLTAGE (V)	POWER (W)	RATED CURRENT (A)	DUTY CYCLES S2min - S3%	INSULATION CLASS	PROTECTION GRADE	NUMBER OF TERMINALS	ROTATION	WEIGHT (kg)
12	1600	209	4min-8%ED	F	IP 54	2	C.W. →	6.9

OVERALL DIMENSION

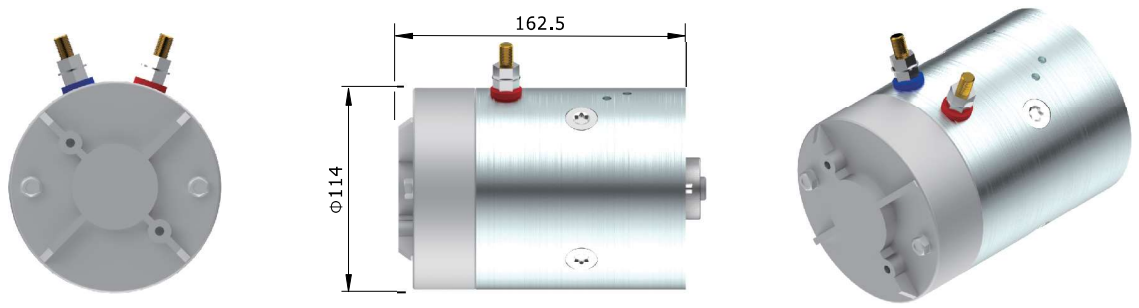

MOUNTING DIMENSION

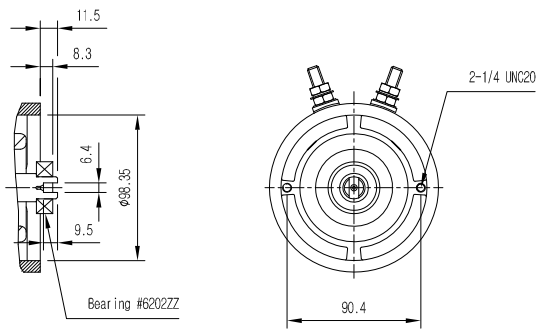

WIRING DIAGRAM

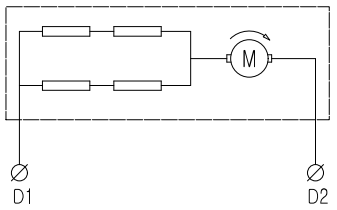

PERFORMANCE CURVE

Flow versus Pressure for D116 Motor

Test Fluid
35℃ (46 cst)

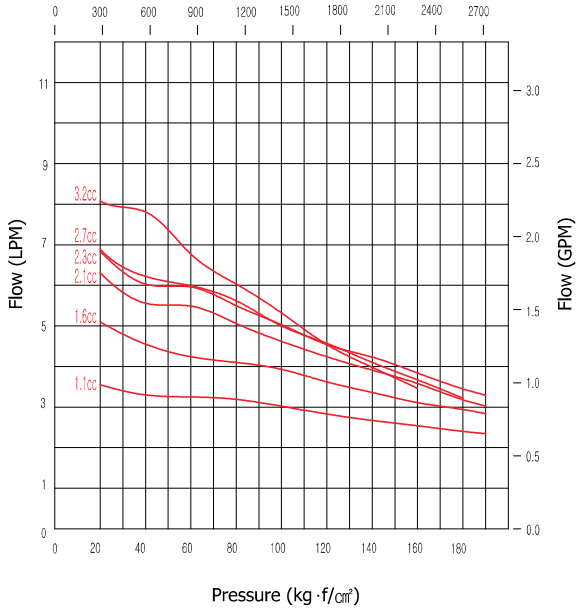

Current versus pressure for D116 Motor

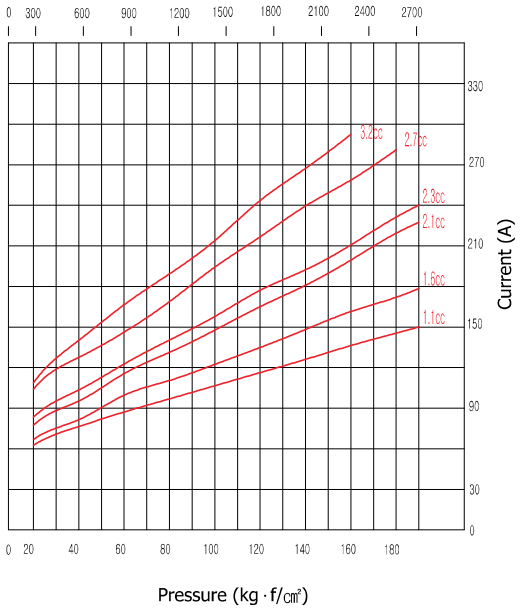

1	D	2	2	2	X	X	G	T
	A /	B /	C	/	D		Brand	Thermal Switch

DC-MOTOR

TECHNICAL DATA

ITEM CODE	APPLICABLE CENTER BLOCK
D222	**X, C, D, T, QH** series

VOLTAGE (V)	POWER (W)	RATED CURRENT (A)	DUTY CYCLES S2min - S3%	INSULATION CLASS	PROTECTION GRADE	NUMBER OF TERMINALS	ROTATION	WEIGHT (kg)
24	2200	110	2min - 7.5%ED	F	IP 54	2	C.W. →	6.9

OVERALL DIMENSION

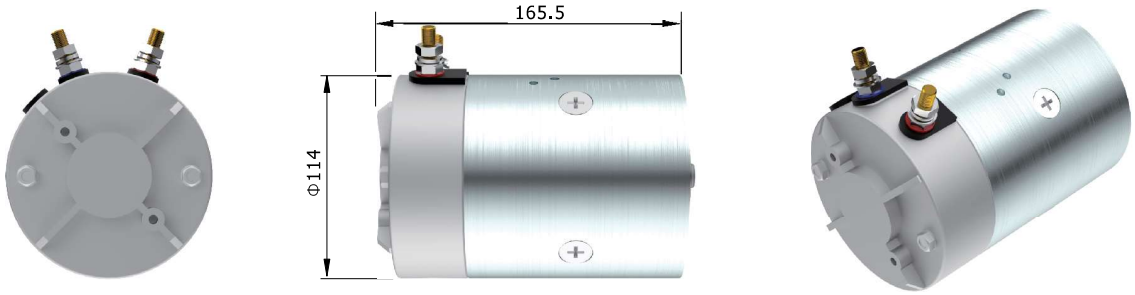

MOUNTING DIMENSION

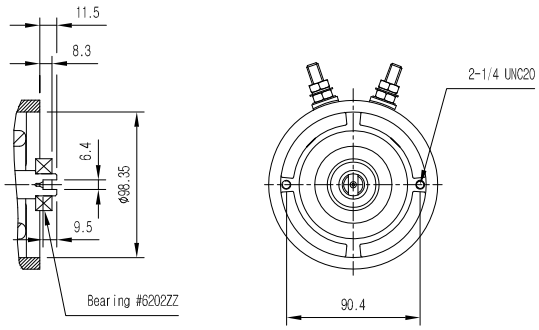

WIRING DIAGRAM

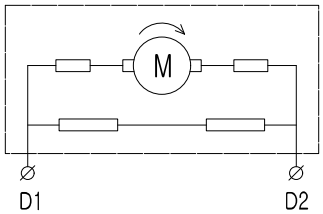

PERFORMANCE CURVE

Flow versus pressure for D222 Motor

Test Fluid
35℃ (46 cst)

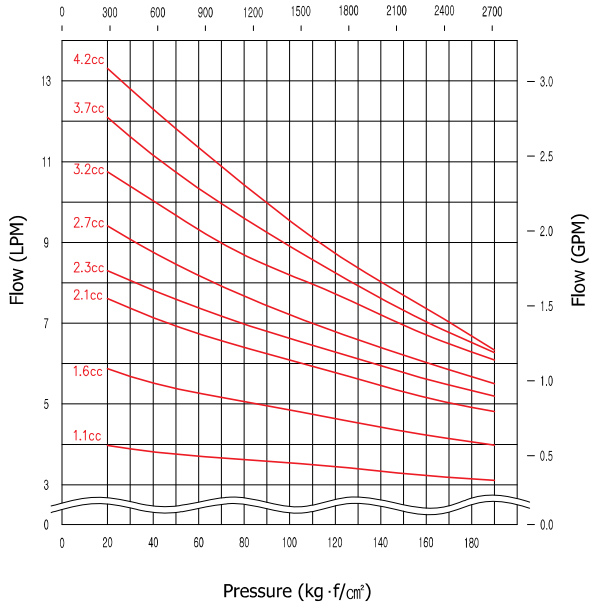

Current versus pressure for D222 Motor

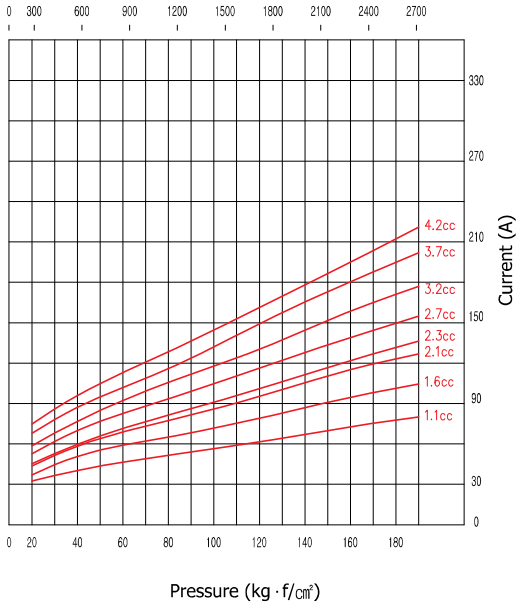

1	D	2	2	2	X	X	M	T
	A /	B /	C	/	D		Brand	Thermal Switch

DC-MOTOR

TECHNICAL DATA

ITEM CODE	APPLICABLE CENTER BLOCK
D222	**X, C, D, T, QH** series

VOLTAGE (V)	POWER (W)	RATED CURRENT (A)	DUTY CYCLES S2min - S3%	INSULATION CLASS	PROTECTION GRADE	NUMBER OF TERMINALS	ROTATION	WEIGHT (kg)
24	2200	110	2min-7.5%ED	F	IP 54	2	C.W. →	6.9

OVERALL DIMENSION

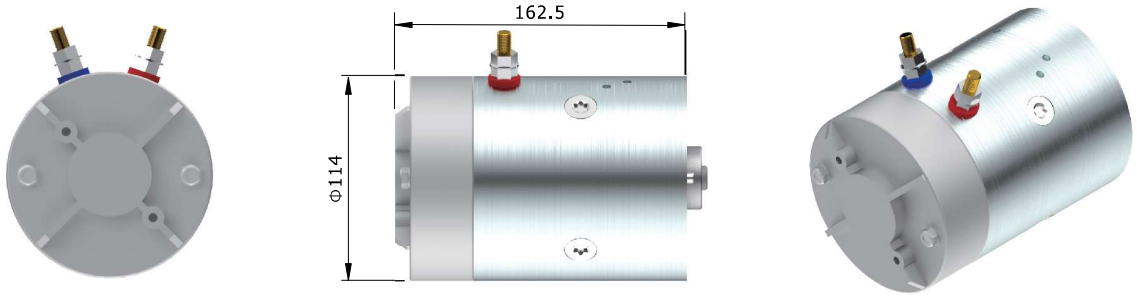

MOUNTING DIMENSION

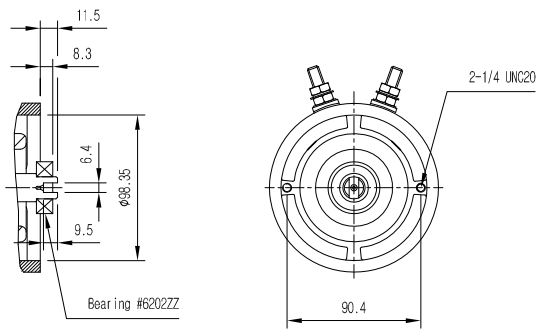

WIRING DIAGRAM

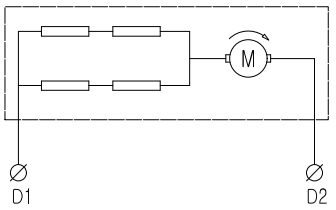

PERFORMANCE CURVE

Flow versus Pressure for D222 Motor

Test Fluid
35℃ (46 cst)

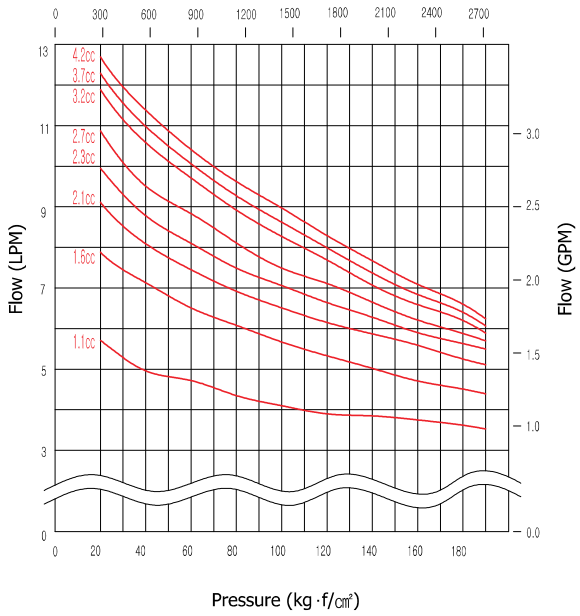

Current versus pressure for D222 Motor

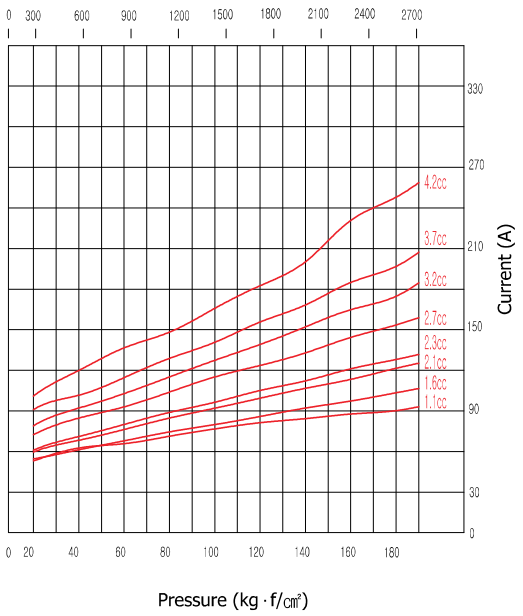

1 D 1 2 0 X X X T
A / B / C / D Brand Thermal Switch

DC-MOTOR

TECHNICAL DATA

ITEM CODE	APPLICABLE CENTER BLOCK
D120	**X, C, D, T, QH** series

VOLTAGE (V)	POWER (W)	RATED CURRENT (A)	DUTY CYCLES S2min - S3%	INSULATION CLASS	PROTECTION GRADE	NUMBER OF TERMINALS	ROTATION	WEIGHT (kg)
12	2000	225	7.5min-20%ED	F	IP 54	2	C.W. →	8.2

OVERALL DIMENSION

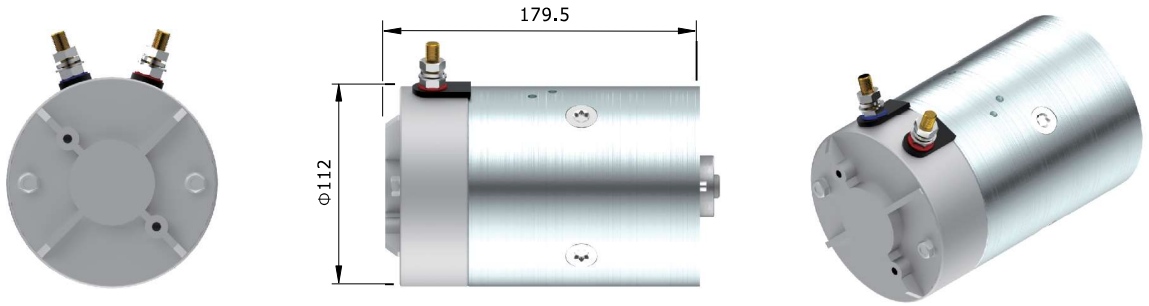

MOUNTING DIMENSION

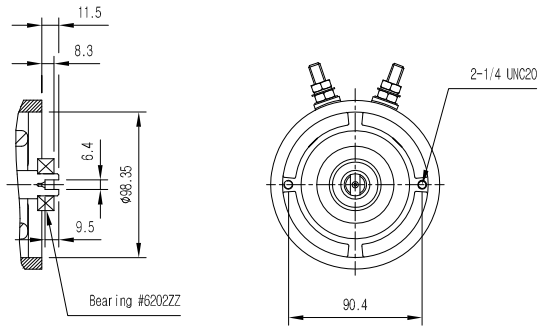

WIRING DIAGRAM

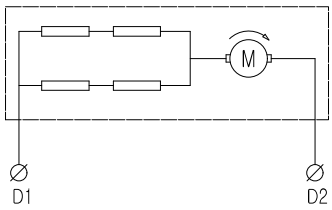

PERFORMANCE CURVE

Flow versus pressure for D120 Motor

Test Fluid
35℃ (46 cst)

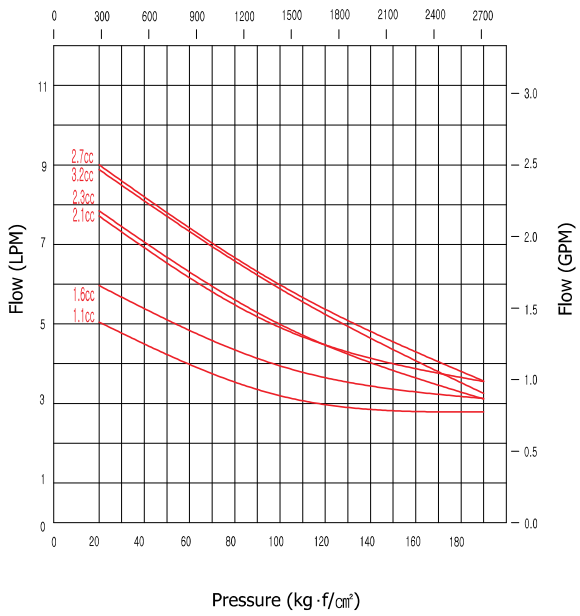

Current versus pressure for D120 Motor

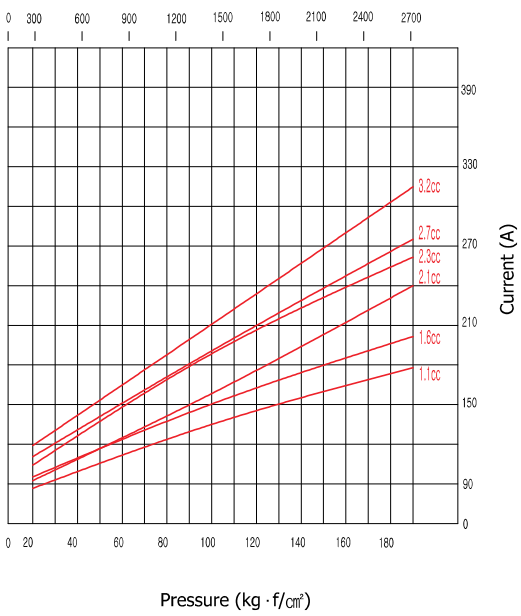

1 D 4 2 0 X X X T
A / B / C / D Brand Thermal Switch

DC-MOTOR

TECHNICAL DATA

ITEM CODE	APPLICABLE CENTER BLOCK
D420	**X, C, D, T, QH, QD** series

VOLTAGE (V)	POWER (W)	RATED CURRENT (A)	DUTY CYCLES S2min - S3%	INSULATION CLASS	PROTECTION GRADE	NUMBER OF TERMINALS	ROTATION	WEIGHT (kg)
48	2000	55	2min - 5%ED	F	IP 54	2	C.W. →	7

OVERALL DIMENSION

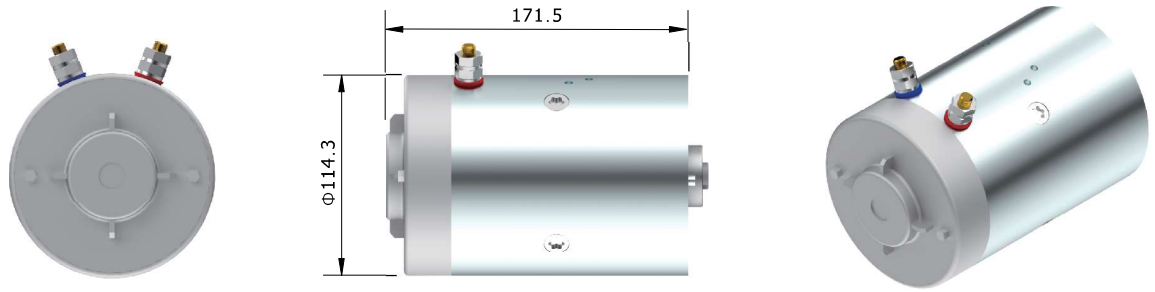

MOUNTING DIMENSION

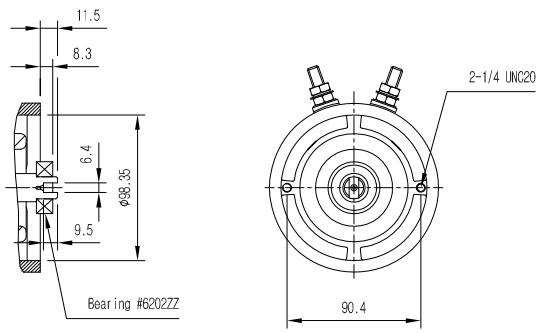

WIRING DIAGRAM

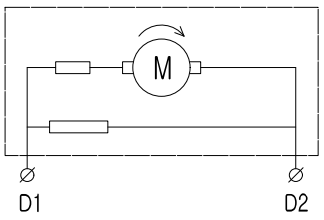

PERFORMANCE CURVE

Flow versus pressure for D420 Motor

Test Fluid
35℃ (46 cst)

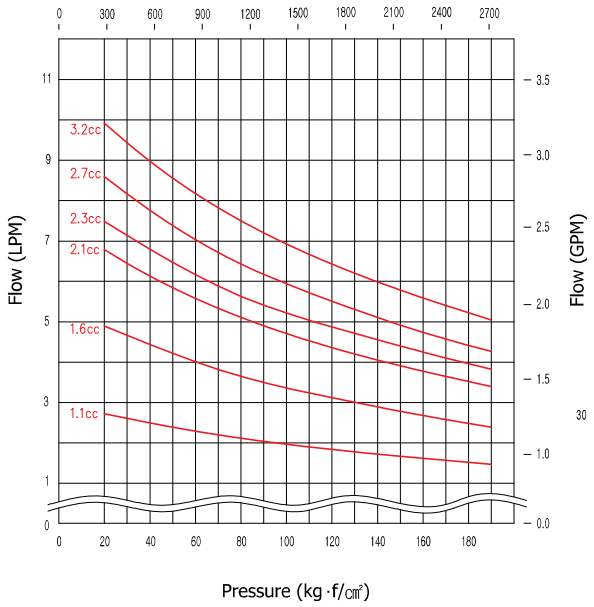

Current versus pressure for D420 Motor

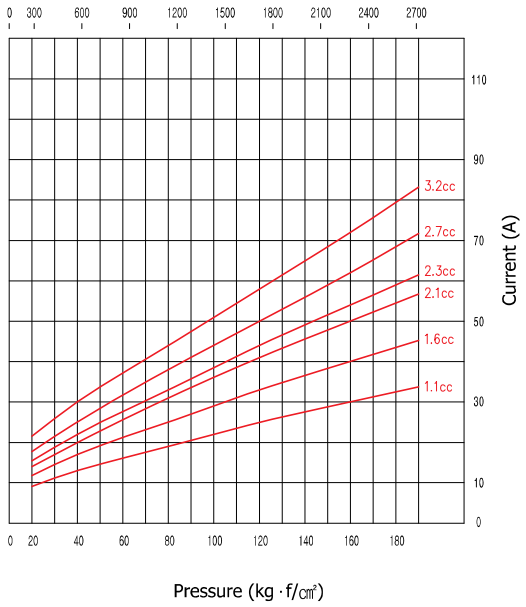

1 D 1 2 4 X X X
A / B / C / D Brand

DC-MOTOR

TECHNICAL DATA

ITEM CODE	APPLICABLE CENTER BLOCK
D124	X series

VOLTAGE (V)	POWER (W)	RATED CURRENT (A)	DUTY CYCLES S2min - S3%	INSULATION CLASS	PROTECTION GRADE	NUMBER OF TERMINALS	ROTATION	WEIGHT (kg)
12	2400	320	2min - 8%ED	F	IP 54	2	C.W. →	10.5

OVERALL DIMENSION

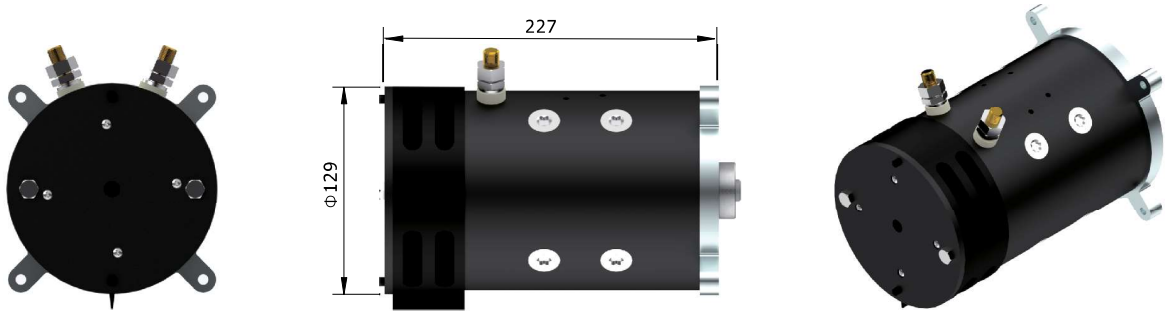

MOUNTING DIMENSION

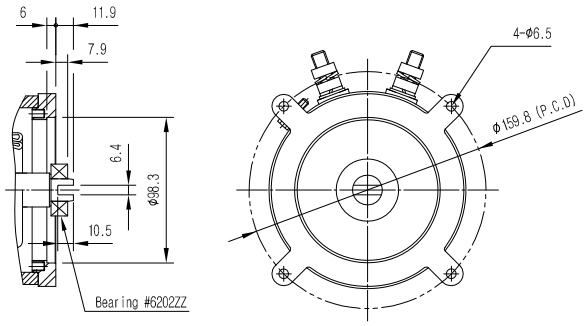

WIRING DIAGRAM

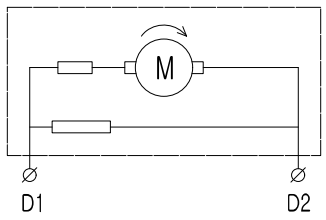

PERFORMANCE CURVE

Flow versus pressure for D124 Motor

Current versus pressure for D124 Motor

Test Fluid
35℃ (46 cst)

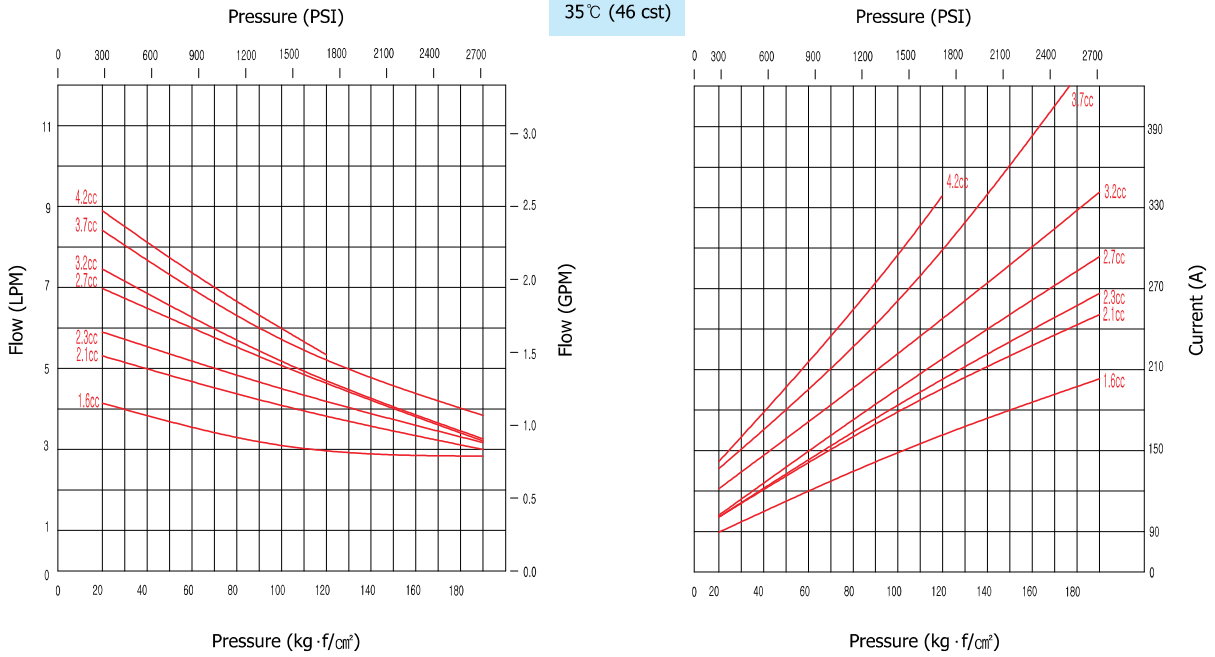

1	D	2	3	0	X	X	X		T
	A /	B /	C	/	D		Brand		Thermal Switch

DC-MOTOR

TECHNICAL DATA

ITEM CODE	APPLICABLE CENTER BLOCK
D230	**X** series

VOLTAGE (V)	POWER (W)	RATED CURRENT (A)	DUTY CYCLES S2min - S3%	INSULATION CLASS	PROTECTION GRADE	NUMBER OF TERMINALS	ROTATION	WEIGHT (kg)
24	3000	170	5min-9%ED	F	IP 23	2	C.W. →	12

OVERALL DIMENSION

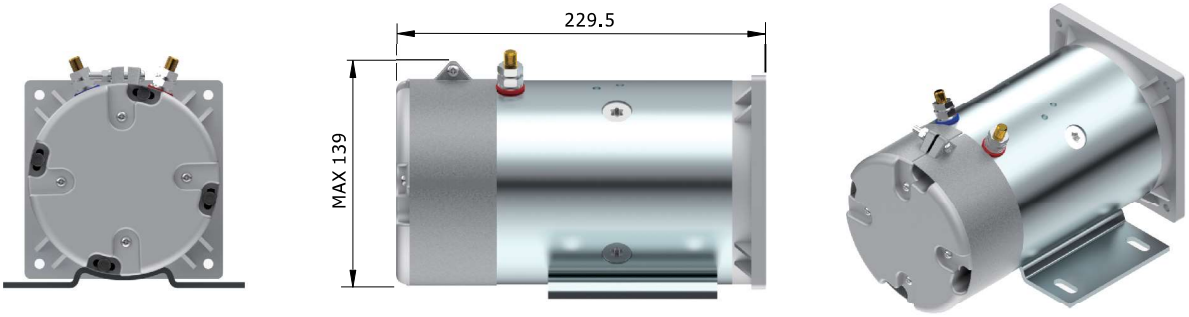

MOUNTING DIMENSION

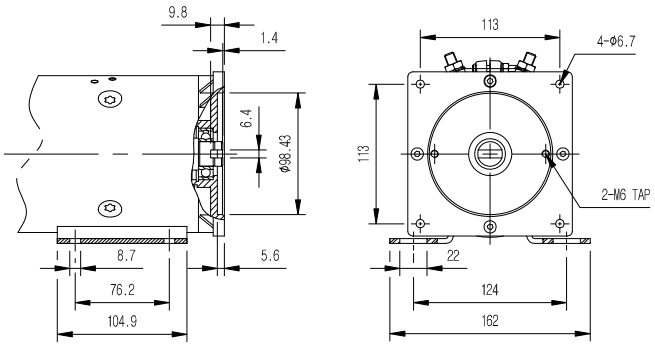

WIRING DIAGRAM

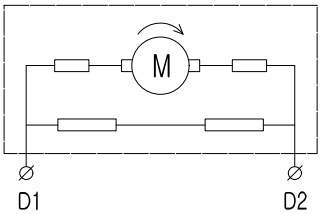

PERFORMANCE CURVE

Flow versus pressure for D230 Motor

Test Fluid
35℃ (46 cst)

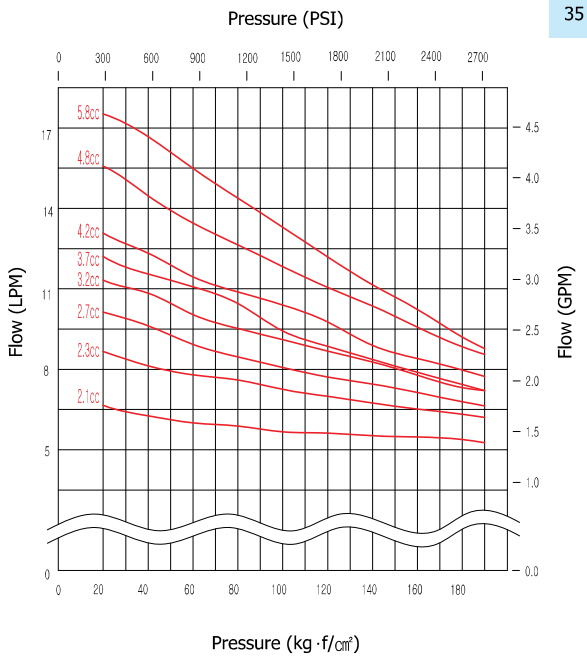

Current versus pressure for D230 Motor

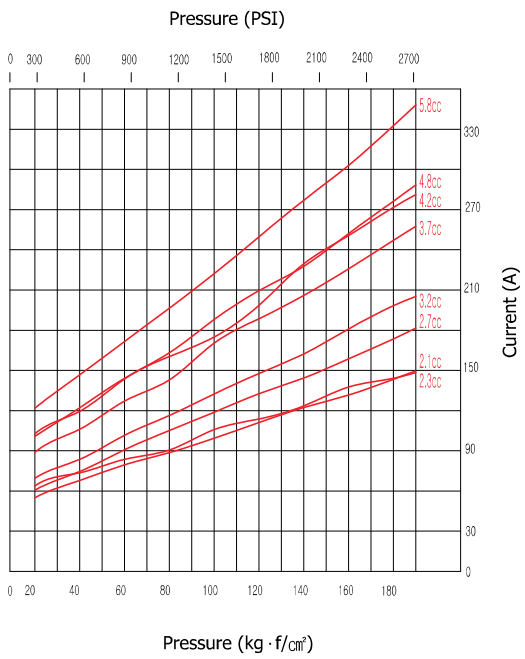

1 L 1 1 6 X X X
A / B / C / D Brand

DC-MOTOR

TECHNICAL DATA

ITEM CODE	APPLICABLE CENTER BLOCK
L116	X series

VOLTAGE (V)	POWER (W)	RATED CURRENT (A)	DUTY CYCLES S2min - S3%	INSULATION CLASS	PROTECTION GRADE	NUMBER OF TERMINALS	ROTATION	WEIGHT (kg)
12	1600	210	20min-40%ED	F	IP 10	2	C.W. →	11.9

OVERALL DIMENSION

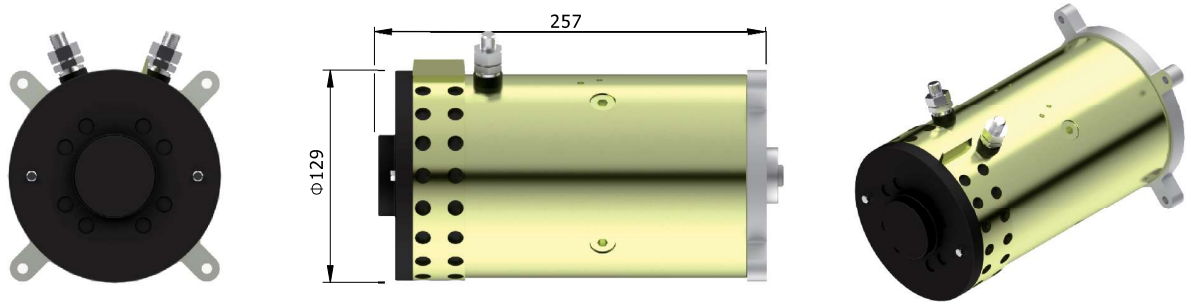

MOUNTING DIMENSION

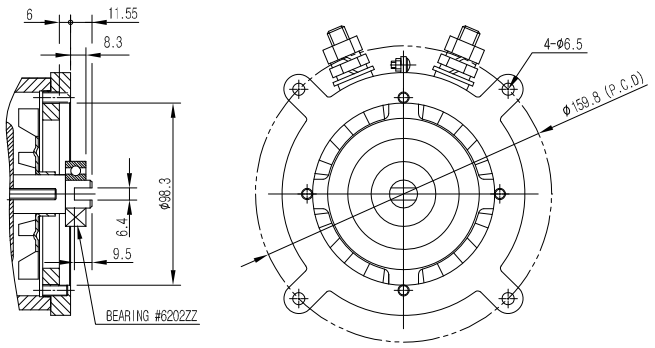

WIRING DIAGRAM

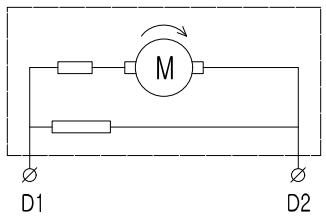

PERFORMANCE CURVE

Flow versus pressure for L116 Motor

Current versus pressure for L116 Motor

Test Fluid
35℃ (46 cst)

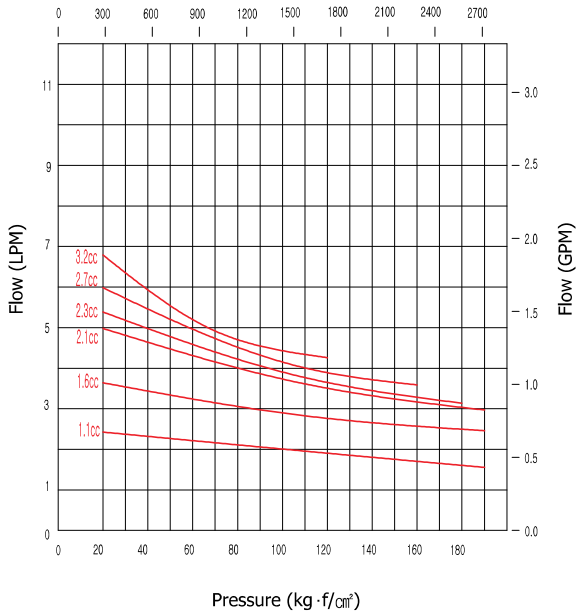

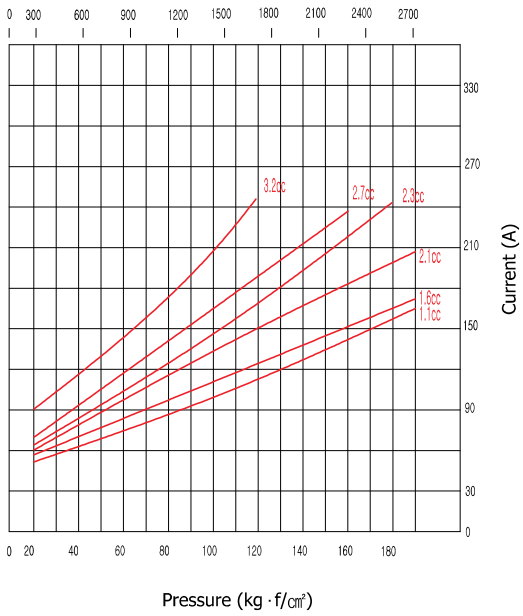

TECHNICAL DATA

ITEM CODE	APPLICABLE CENTER BLOCK
L222	X series

VOLTAGE (V)	POWER (W)	RATED CURRENT (A)	DUTY CYCLES S2min - S3%	INSULATION CLASS	PROTECTION GRADE	NUMBER OF TERMINALS	ROTATION	WEIGHT (kg)
24	2200	120	20min-40%ED	F	IP 10	2	C.W. →	12.0

OVERALL DIMENSION

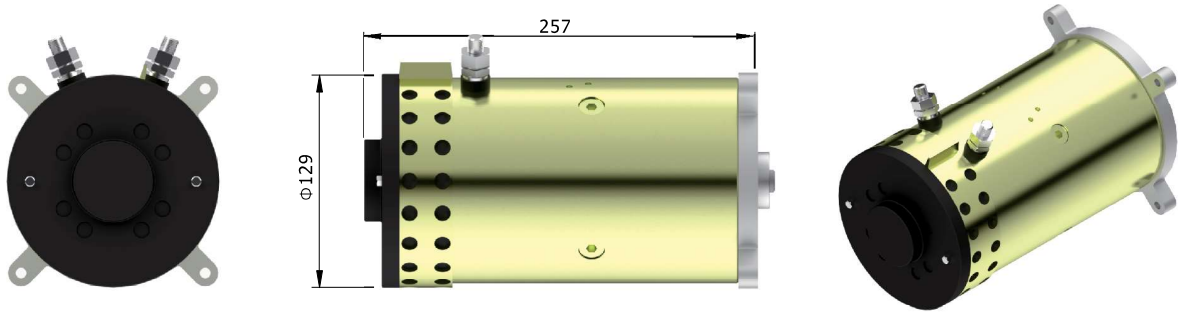

MOUNTING DIMENSION

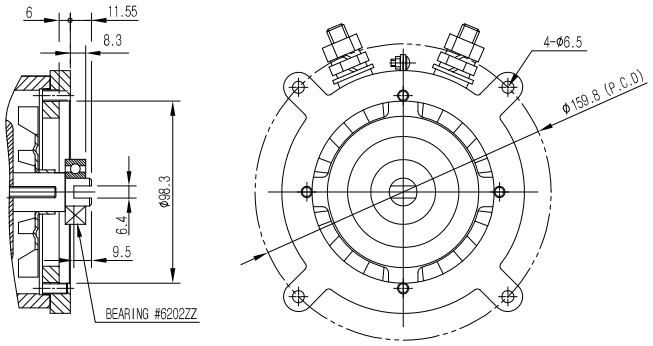

WIRING DIAGRAM

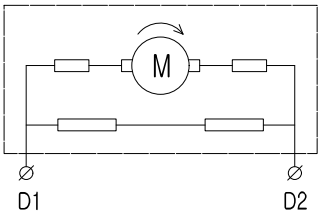

PERFORMANCE CURVE

Flow versus pressure for L222 Motor

Current versus pressure for L222 Motor

Test Fluid
35℃ (46 cst)

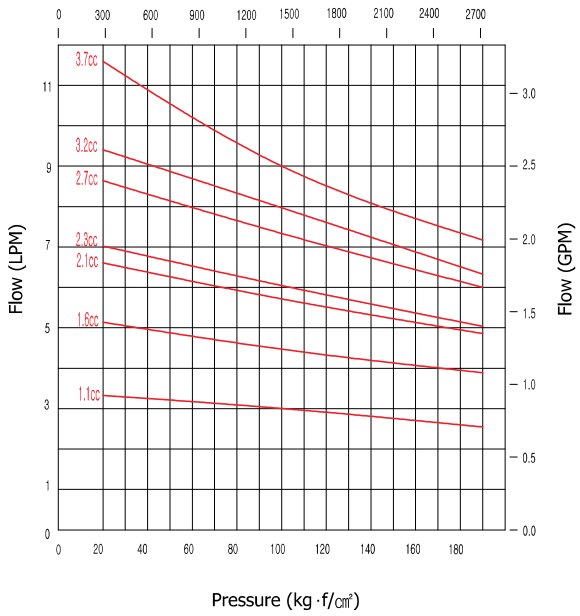

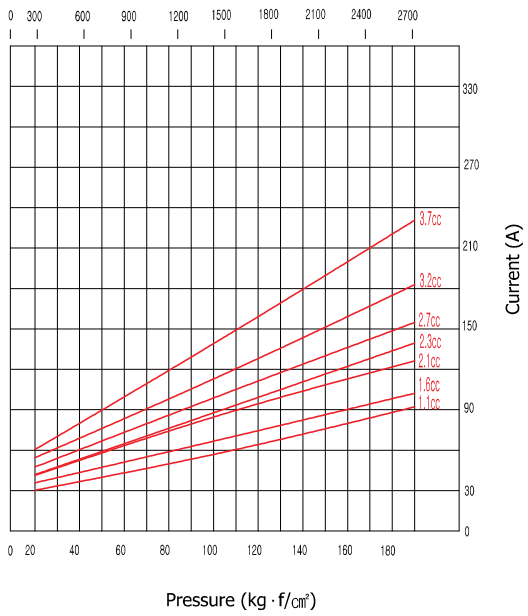

1 L 2 3 0 X X X
A / B / C / D Brand

DC-MOTOR

TECHNICAL DATA

ITEM CODE	APPLICABLE CENTER BLOCK
L230	X series

VOLTAGE (V)	POWER (W)	RATED CURRENT (A)	DUTY CYCLES S2min - S3%	INSULATION CLASS	PROTECTION GRADE	NUMBER OF TERMINALS	ROTATION	WEIGHT (kg)
24	3000	175	13min-28%ED	F	IP 12	2	C.W. →	13

OVERALL DIMENSION

MOUNTING DIMENSION

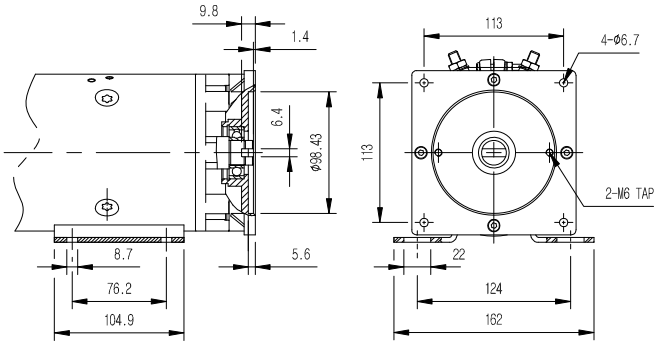

WIRING DIAGRAM

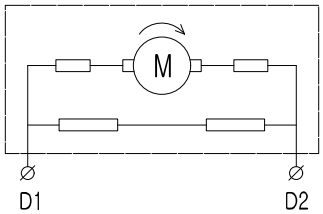

PERFORMANCE CURVE

Flow versus Pressure for L230 Motor

Current versus pressure for L230 Motor

Test Fluid
35℃ (46 cst)

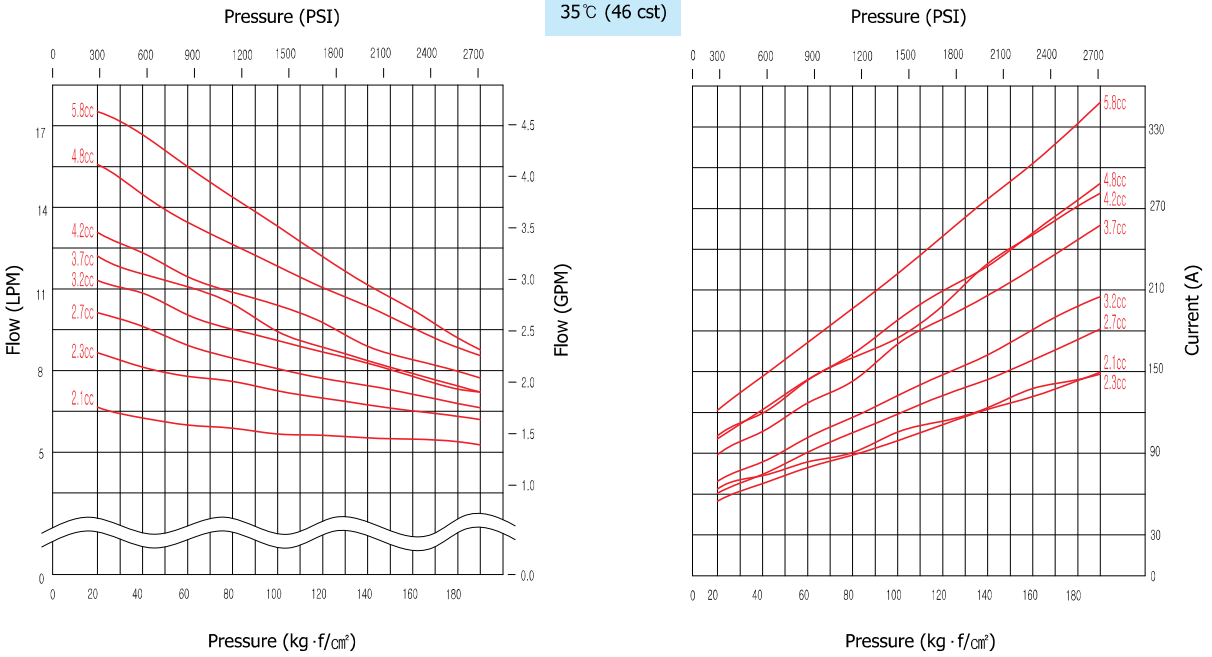

1	X	X	X	X	T	2	X
	A /	B /	C	/	D		Brand

START RELAY

Note. A,B and C sections are DC motor code.

TECHNICAL DATA

ITEM CODE	VOLTAGE	Max. ON TIME	RESISTIVE LOAD CARRY	INTERRUPT AMPARE	PEAK INDUCTIVE INRUSH AMPARE	ELECTRICAL CYCLE LIFE
T1	12V	6 min	150A	250A	800	100,000
T2	24V	6 min	150A	250A	800	60,000
XX	without Start Relay					

OVERALL DIMENSION

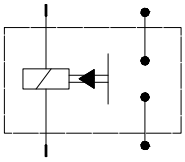

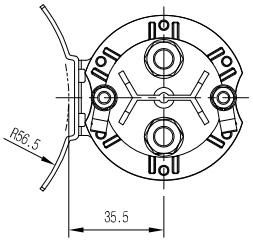

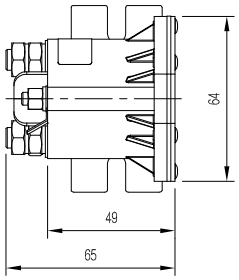

TECHNICAL DATA

ITEM CODE	VOLTAGE	Max. ON TIME	RESISTIVE LOAD CARRY	INTERRUPT AMPARE	PEAK INDUCTIVE INRUSH AMPARE	ELECTRICAL CYCLE LIFE
I1	12V	6 min	150A	250A	800	100,000
I2	24V	6 min	150A	250A	800	60,000

OVERALL DIMENSION

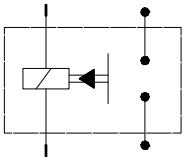

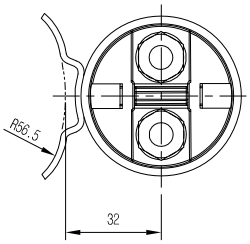

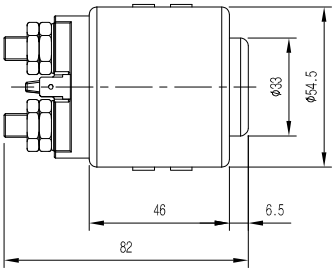

TECHNICAL DATA

ITEM CODE	VOLTAGE	Max. ON TIME	RESISTIVE LOAD CARRY	INTERRUPT AMPARE	PEAK INDUCTIVE INRUSH AMPARE	ELECTRICAL CYCLE LIFE
A1	12V	3 min	100A	250A	500A	60,000
A2	24V	3 min	100A	250A	500A	60,000

OVERALL DIMENSION

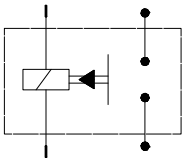

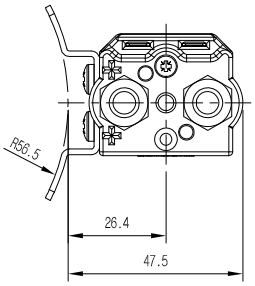

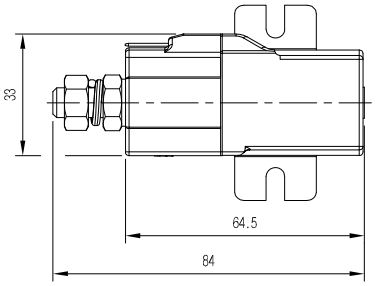

1 WIRING DIAGRAM

TYPICAL ELECTRIC WIRING DIAGRAM

2 Buttons–One double acting

Unidirectional Motor

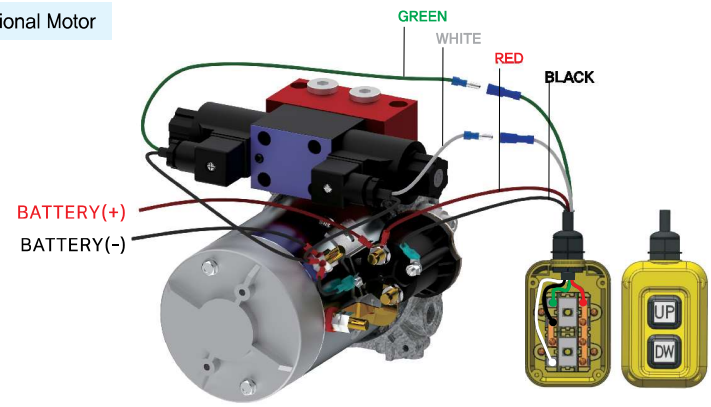

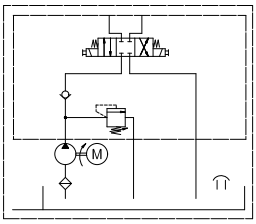

4 Buttons–Two double acting

Unidirectional Motor

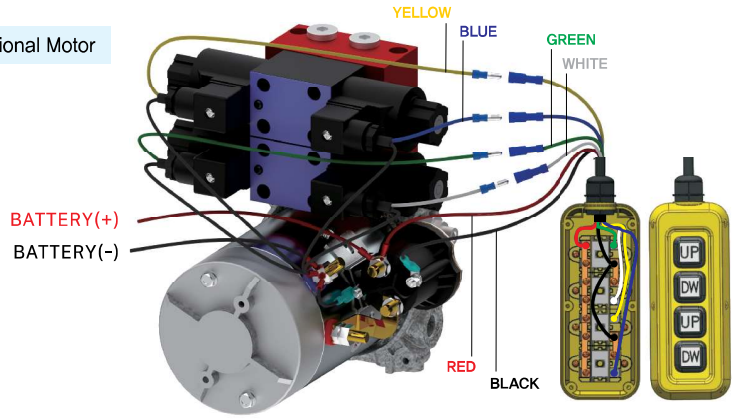

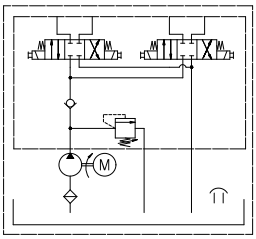

6 Buttons–Three double acting

Unidirectional Motor

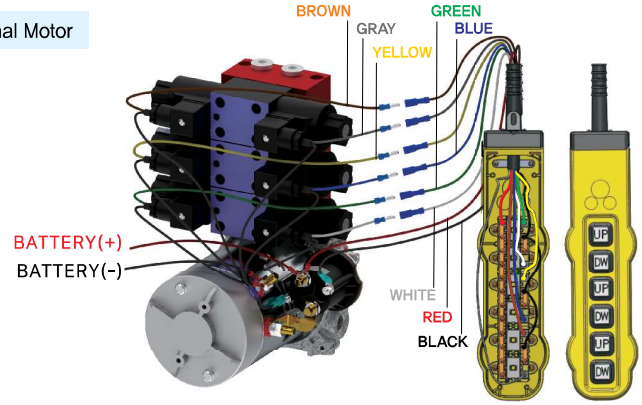

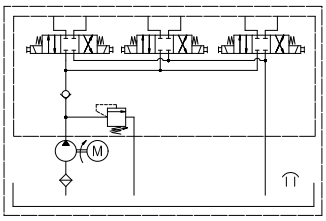

2 Buttons–One single acting

Unidirectional Motor

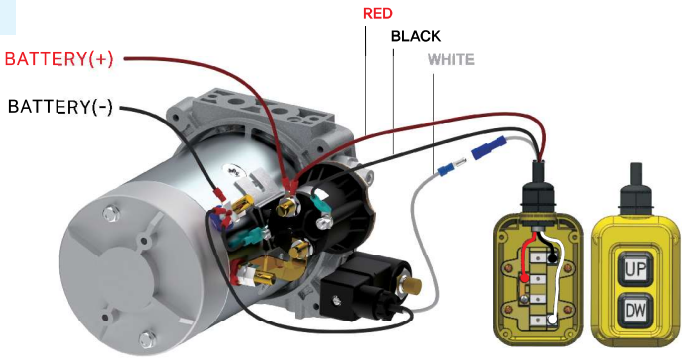

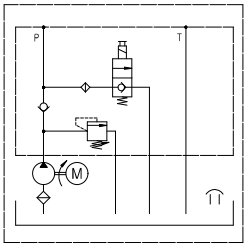

WIRING DIAGRAM

TYPICAL ELECTRIC WIRING DIAGRAM

4 Buttons–Two single acting

Unidirectional Motor

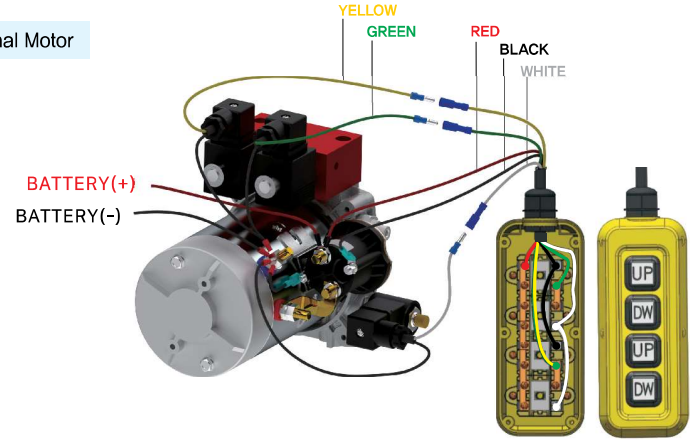

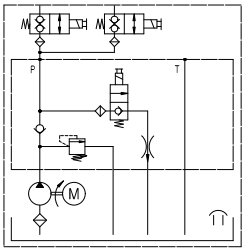

6 Buttons–Three single acting

Unidirectional Motor

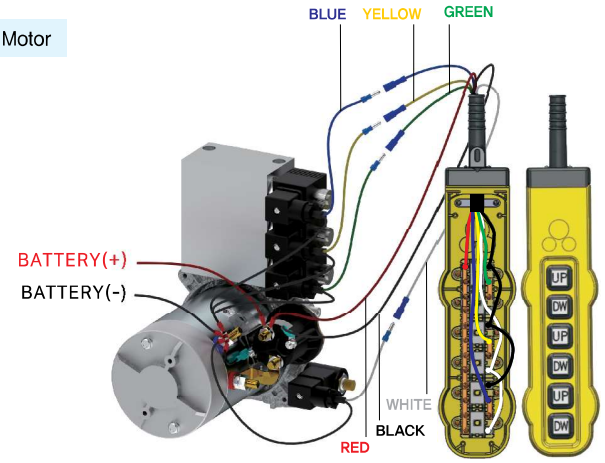

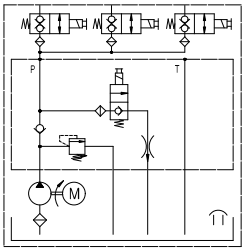

4 Buttons–One single & One double acting

Unidirectional Motor

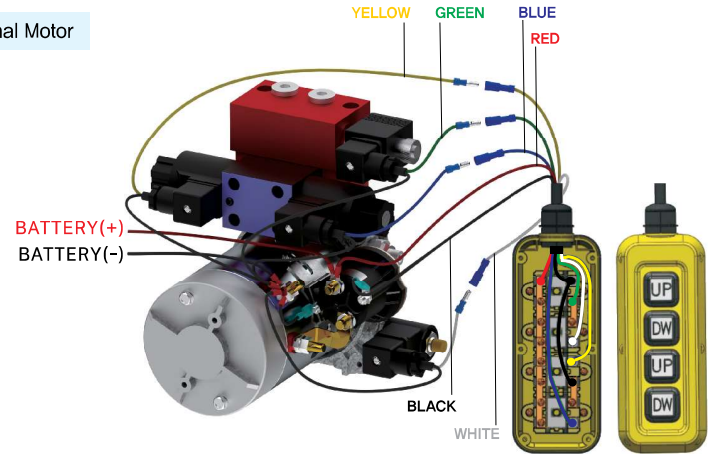

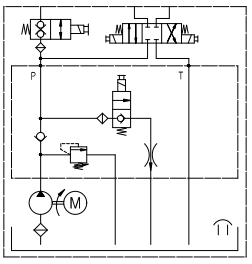

1 [ ][ ] / [ ][ ] / [ ][ ] / [ ][ ] [X][X]
A / B / C / D Brand/Duty

AC-MOTOR

A	ITEM CODE	XXX	H	S	T	F
	VOLTAGE	Without motor	110V	220V	230 / 400V	254 / 440V
	TYPE		AC Single-phase motor		AC three-phase motor	

B	ITEM CODE	2	4	6
	POLE	2 pole	4 pole	6 pole

C	ITEM CODE	01	03	07	10	15	18	22	30	40
	POWER(kW)	0.18	0.37	0.75	1.0	1.5	1.8	2.2	3.0	4.0

D	ITEM CODE	50	60	56
	FREQUENCY	50Hz	60Hz	50/60Hz

Note. 1. 3-phase motor is double frequency type (50/60Hz)
2. 1-phase motor is single frequency type (50Hz or 60Hz)

AC - Motor code & Information

ITEM CODE	VOLTAGE (V)	POWER (kW)	FREQUENCY (Hz)	INSULATION CLASS	FRAME
H40160	110	0.18	60	F	63
S40160	220	0.18	60	F	63
T40156	230/400	0.18	50/60	F	63
F40156	254/440	0.18	50/60	F	63
H40360	110	0.37	60	F	71
S40360	220	0.37	60	F	71
T40356	230/400	0.37	50/60	F	71
F40356	254/440	0.37	50/60	F	71
H40760	110	0.75	60	F	80
S40760	220	0.75	60	F	80
T40756	230/400	0.75	50/60	F	80
F40756	254/440	0.75	50/60	F	80
H41060	110	1.0	60	F	90
S41060	220	1.0	60	F	90
T41056	230/400	1.0	50/60	F	90
F41056	254/440	1.0	50/60	F	90
H41560	110	1.5	60	F	90
S41560	220	1.5	60	F	90
T41556	230/400	1.5	50/60	F	90
F41556	254/440	1.5	50/60	F	90

Note. '*' Available on order.

AC - Motor code & Information					
ITEM CODE	VOLTAGE (V)	POWER (kW)	Frequency (Hz)	INSULATION CLASS	FRAME
H41860	110	1.8	60	F	90
S41860	220	1.8	60	F	90
T41856	230/400	1.8	50/60	F	90
F41856	254/440	1.8	50/60	F	90
H42260	110	2.2	60	F	90
S42260	220	2.2	60	F	90
T42256	230/400	2.2	50/60	F	90
F42256	254/440	2.2	50/60	F	90
H43060	110	3.0	60	F	100
S43060	220	3.0	60	F	100
T43056	230/400	3.0	50/60	F	100
F43056	254/440	3.0	50/60	F	100
H44060	110	4.0	60	F	112
S44060	220	4.0	60	F	112
T44056	230/400	4.0	50/60	F	112
F44056	254/440	4.0	50/60	F	112

Note. '*' Available on order.
HD : Hydro-Tek own motor face design for assembling Hydro-Tek center block (manifold block) directly.
B14 : International design

Note. 1. Please contact Hydro-Tek for 2pole, 6pole motors, B14 type motor, over 4kW and custom design motors.
2. 4kw is international standard. (B14 type motor)

1	S	4	0	1	6	0	X	X
	A /	B /	C	/	D		Brand	/Duty

AC-MOTOR

TECHNICAL DATA

0.18 kw

ITEM CODE	A		B	C	D	RATED CURRENT (A)	WEIGHT (kg)
	PHASE	VOLTAGE (V)	POLE	POWER (kw)	FREQUENCY (Hz)		
H40160	1Φ	110	4	0.18	60	****	****
S40160		220				1.41	4.7
T40156	3Φ	230/400			50/60	1.12	4.4
F40156		254/440				****	****

R.P.M	INSULATION CLASS	PROTECTION GRADE	EFFICIENCY	DUTY CYCLE		FRAME SIZE	DESIGN	ROTATION
1610	F	IP 54	55%	S1	S2	63	HD	C.W. ⟶

0.37 kw

ITEM CODE	A		B	C	D	RATED CURRENT (A)	WEIGHT (kg)
	PHASE	VOLTAGE (V)	POLE	POWER (kw)	FREQUENCY (Hz)		
H40360	1Φ	110	4	0.37	60	****	****
S40360		220				2.90	7.00
T40356	3Φ	230/400			50/60	1.75	6.20
F40356		254/440				1.67	6.20

R.P.M	INSULATION CLASS	PROTECTION GRADE	EFFICIENCY	DUTY CYCLE		FRAME SIZE	DESIGN	ROTATION
1610	F	IP 55	67%	S1	S2	71	HD	C.W. ⟶

OVERALL DIMENSION

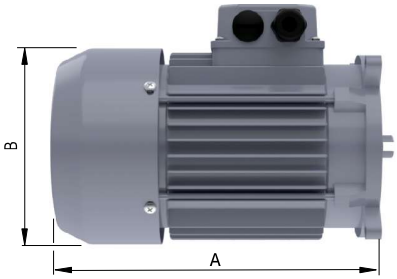

	A	B	C
0.18 kw	195	Φ122	100
0.37 kw	225	Φ140	111

DIMENSION

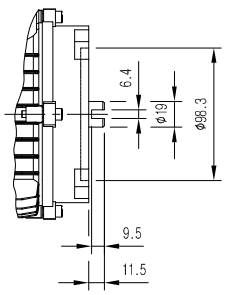

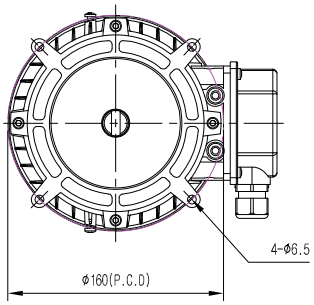

Note. Please contact Hydro-Tek for ****.
Please contact Hydro-Tek for single phase 50Hz AC motor.

TECHNICAL DATA

0.75 kw

ITEM CODE	A		B	C	D	RATED CURRENT (A)	WEIGHT (kg)
	PHASE	VOLTAGE (V)	POLE	POWER (kw)	FREQUENCY (Hz)		
H40760	1Φ	110	4	0.75	60	****	****
S40760		220				5.20	11.7
T40756	3Φ	230/400			50/60	3.50	7.6
F40756		254/440				3.10	7.6

R.P.M	INSULATION CLASS	PROTECTION GRADE	EFFICIENCY	DUTY CYCLE		FRAME SIZE	DESIGN	ROTATION
1650	F	IP 55	70%	S1	S2	80	HD	C.W. ⟶

1.0 kw

ITEM CODE	A		B	C	D	RATED CURRENT (A)	WEIGHT (kg)
	PHASE	VOLTAGE (V)	POLE	POWER (kw)	FREQUENCY (Hz)		
H41060	1Φ	110	4	1.0	60	****	****
S41060		220				****	****
T41056	3Φ	230/400			50/60	4.47	12.0
F41056		254/440				4.07	12.2

R.P.M	INSULATION CLASS	PROTECTION GRADE	EFFICIENCY	DUTY CYCLE		FRAME SIZE	DESIGN	ROTATION
1670	F	IP 55	76%	S1	S2	90	HD	C.W. ⟶

OVERALL DIMENSION

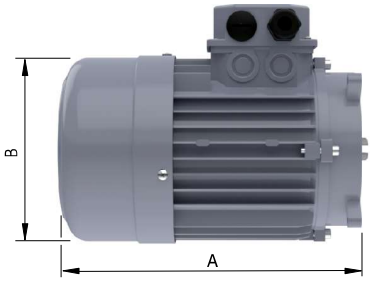

	A	B	C
0.75 kw	245	Φ157	125
1.0 kw	285	Φ175	130

DIMENSION

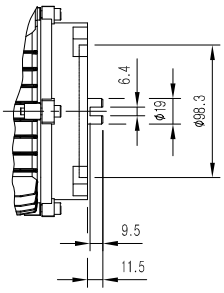

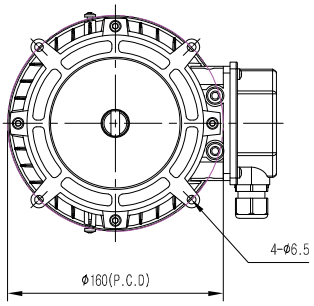

Note. Please contact Hydro-Tek for ****.
Please contact Hydro-Tek for single phase 50Hz AC motor.

1	T	4	1	5	5	6	X	X
	A /	B /	C	/	D		Brand/Duty	

AC-MOTOR

TECHNICAL DATA

1.5 kw

ITEM CODE	A		B	C	D	RATED CURRENT (A)	WEIGHT (kg)
	PHASE	VOLTAGE (V)	POLE	POWER (kw)	FREQUENCY (Hz)		
H41560	1Φ	110	4	1.5	60	****	****
S41560		220				11.5	16.5
T41556	3Φ	230/400			50/60	6.23	13.8
F41556		254/440				5.40	12.0

R.P.M	INSULATION CLASS	PROTECTION GRADE	EFFICIENCY	DUTY CYCLE		FRAME SIZE	DESIGN	ROTATION
1680	F	IP 55	55%	S1	S2	90	HD	C.W. ⟶

1.8 kw

ITEM CODE	A		B	C	D	RATED CURRENT (A)	WEIGHT (kg)
	PHASE	VOLTAGE (V)	POLE	POWER (kw)	FREQUENCY (Hz)		
H41860	1Φ	110	4	1.8	60	****	****
S41860		220				13.30	16.5
T41856	3Φ	230/400			50/60	****	****
F41856		254/440				****	****

R.P.M	INSULATION CLASS	PROTECTION GRADE	EFFICIENCY	DUTY CYCLE		FRAME SIZE	DESIGN	ROTATION
1650	F	IP 55	60%	S1	S2	90	HD	C.W. ⟶

OVERALL DIMENSION

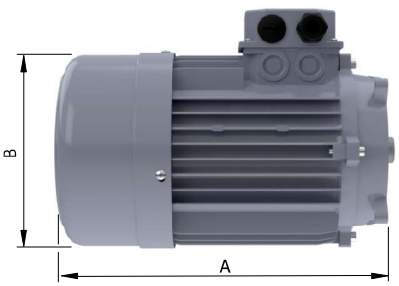

	A	B	C
1.5 kw	285	Φ175	130
1.8 kw	285	Φ175	130

DIMENSION

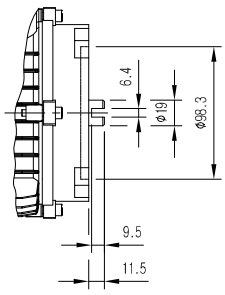

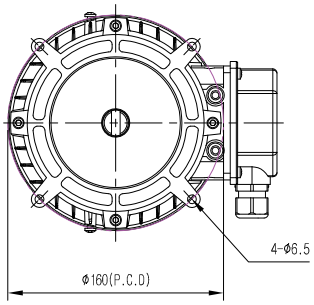

Note. Please contact Hydro-Tek for ****.
Please contact Hydro-Tek for single phase 50Hz AC motor.

TECHNICAL DATA

2.2 kw

ITEM CODE	A		B	C	D	RATED CURRENT (A)	WEIGHT (kg)
	PHASE	VOLTAGE (V)	POLE	POWER (kw)	FREQUENCY (Hz)		
H42260	1Φ	110	4	2.2	60	****	****
S42260		220				****	****
T42256	3Φ	230/400			50/60	8.10	15.0
F42256		254/440				7.40	14.8

R.P.M	INSULATION CLASS	PROTECTION GRADE	EFFICIENCY	DUTY CYCLE		FRAME SIZE	DESIGN	ROTATION
1695	F	IP 55	82%	S1	S2	90	HD	C.W. ⟶

OVERALL DIMENSION

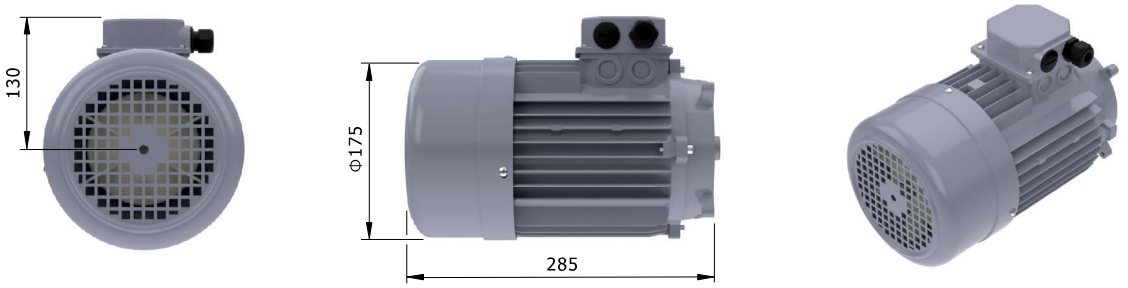

DIMENSION

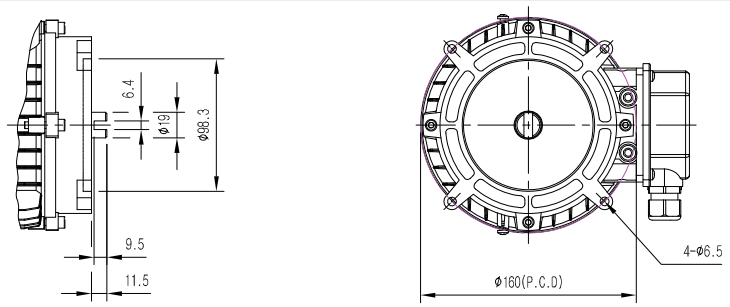

Note. Please contact Hydro-Tek for ****.
Please contact Hydro-Tek for single phase 50Hz AC motor.

Wiring diagram

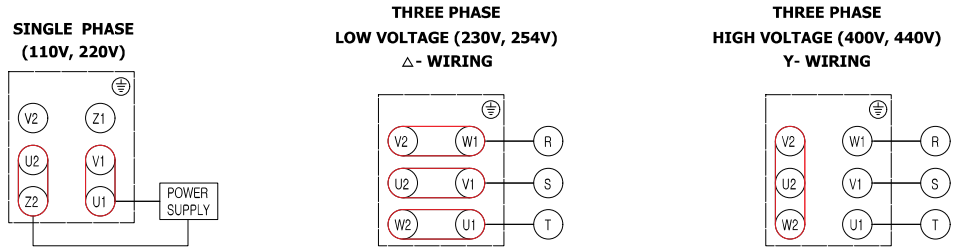

International standard motor design

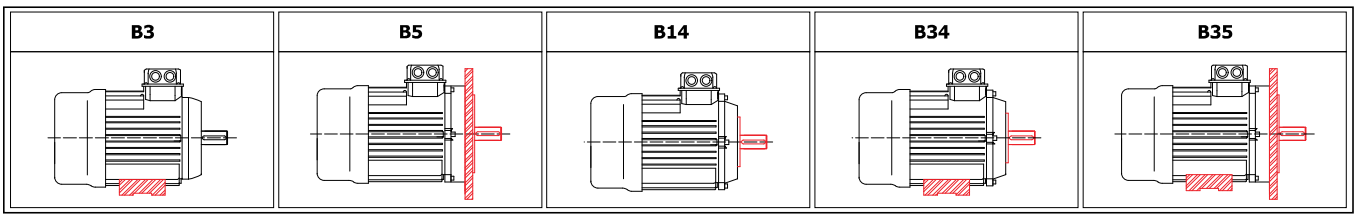

1	T	4	3	0	5	6	X	X
	A /	B /	C	/	D		Brand/Duty	

AC-MOTOR

TECHNICAL DATA

3.0 kw

ITEM CODE	A		B	C	D	RATED CURRENT (A)	WEIGHT (kg)
	PHASE	VOLTAGE (V)	POLE	POWER (kw)	FREQUENCY (Hz)		
H43060	1Φ	110	4	3.0	60	****	****
S43060		220				****	****
T43056	3Φ	230/400			50/60	****	22.1
F43056		254/440				****	****

R.P.M	INSULATION CLASS	PROTECTION GRADE	EFFICIENCY	DUTY CYCLE		FRAME SIZE	DESIGN	ROTATION
1700	F	IP 55	80%	S1	S2	100	B14	C.W. ⟶

4.0 kw

ITEM CODE	A		B	C	D	RATED CURRENT (A)	WEIGHT (kg)
	PHASE	VOLTAGE (V)	POLE	POWER (kw)	FREQUENCY (Hz)		
H44060	1Φ	110	4	4.0	60	****	****
S44060		220				****	****
T44056	3Φ	230/400			50/60	14.30	27.2
F44056		254/440				12.10	27.5

R.P.M	INSULATION CLASS	PROTECTION GRADE	EFFICIENCY	DUTY CYCLE		FRAME SIZE	DESIGN	ROTATION
1710	F	IP 55	83%	S1	S2	112	B14	C.W. ⟶

OVERALL DIMENSION

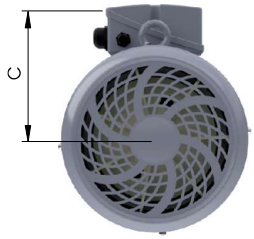

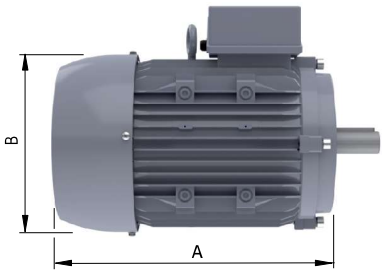

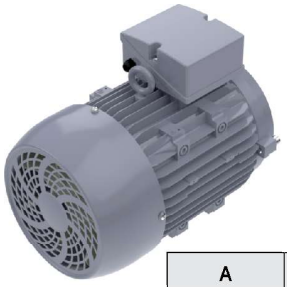

	A	B	C
3.0 kw	309	Φ198	152
4.0 kw	335	Φ220	156

DIMENSION

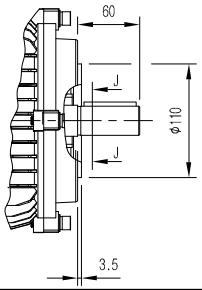

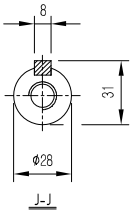

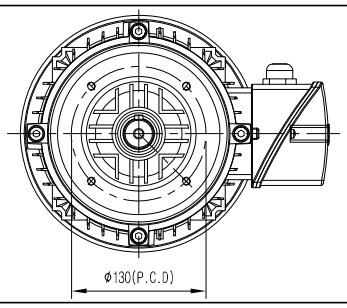

Note. Please contact Hydro-Tek for ****.
Please contact Hydro-Tek for single phase 50Hz AC motor.

MOTOR FLANGE & COUPLING

Coupling for DC - Motor & AC - Motor power unit

CP01	CP02	CP03	CP04	CP05	CP06	CP07	CP08
DA / FR / FX / OR / OX XA (Old Model)	DB XB (Old Model)	XA / CA (In case of B14-Motor 80, 90 Frame)	XB / QH	SH / SD	XA (In case of B14-Motor 112 Frame)	DX / DF (P.M.U)	for L230 MOTOR
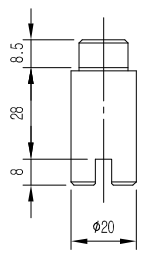	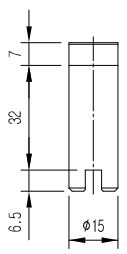	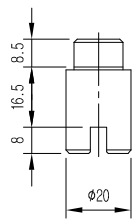	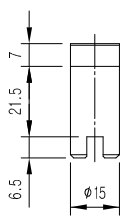	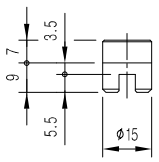	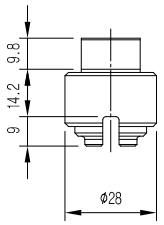	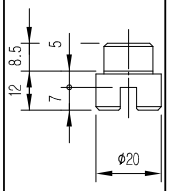	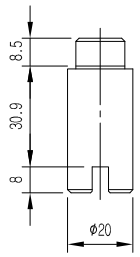

Flange & coupling kit for international standard AC - motor (B14 - type) power unit

FLANGE CODE	COUPLING HOLDER CODE	FRAME	A	B	C	D	E	F	G	H	I
F080	C080	80	90	90.4	40	6.5	6.5	19	32	36	6.4
F090	C090	90		90.4	50	9	6.5	24	40	46	6.4
F112	C112	112		120	67.2	9	6.5	28	44	48	6.4

80 & 90 FRAME

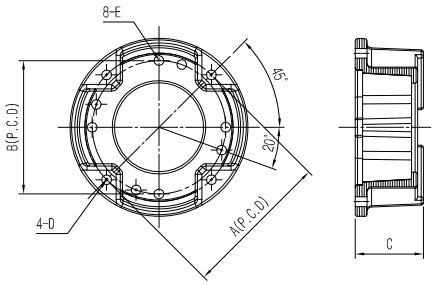

100 & 112 FRAME

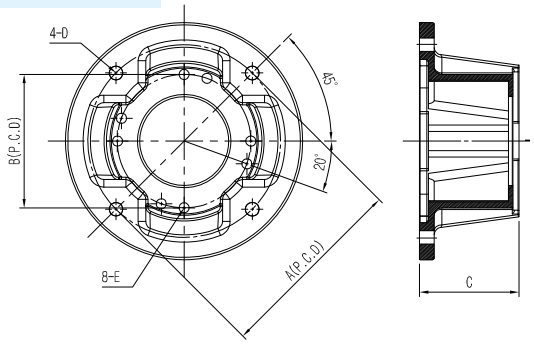

100 & 112 FRAME

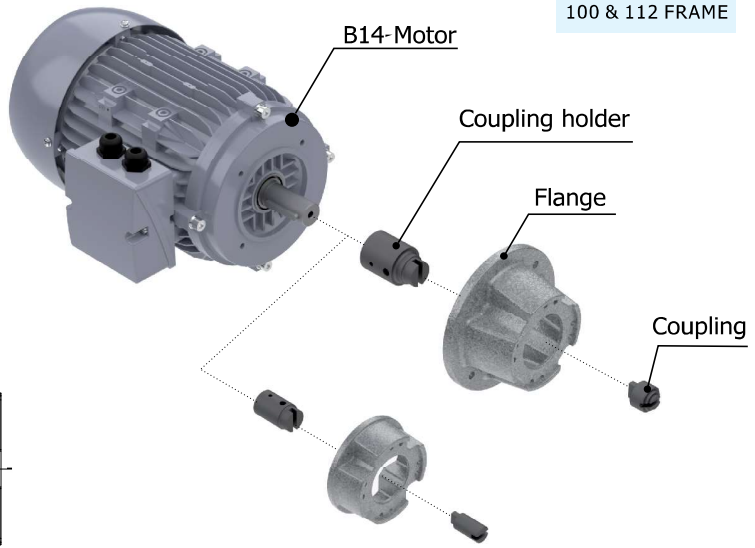

80 & 90 FRAME

Note. 1. This flange and coupling can be assembled with B14 type motor and Hydro-Tek center block.

2. You can purchase B14 type Motor in your area.

CENTER BLOCK

A	ONE GROUP	HALF GROUP
	XA, CA	XB, QH, SH

CENTER BLOCK DIAGRAM

B			
ITEM CODE	XA1	XA1/F14F	
DIAGRAM	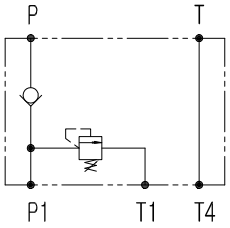	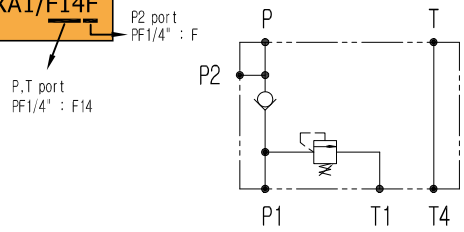	
ITEM CODE	XA3	XA3/F14F	
DIAGRAM	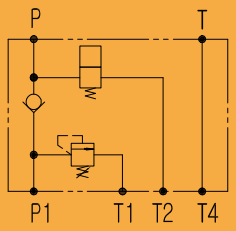	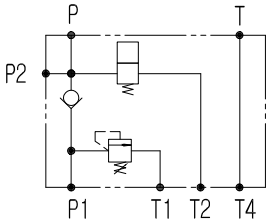	
ITEM CODE	XA5	XA5/F14F	
DIAGRAM	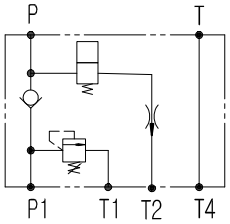	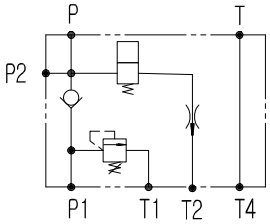	
ITEM CODE	XA7	XA7/F14F	
DIAGRAM	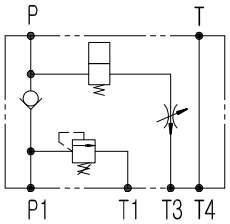	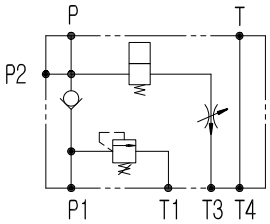	
ITEM CODE	XA9		
DIAGRAM	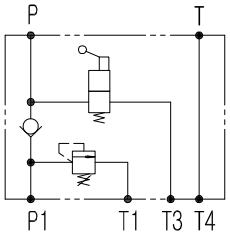		

C — RELIEF VALVE PRESSURE RANGE

Code	A	B	C	D	F
Pressure range	10 ~ 60 kg·f/㎠	50 ~ 150 kg·f/㎠	100 ~ 200 kg·f/㎠	150 ~ 250 kg·f/㎠	50 ~ 120 kg·f/㎠ (flow range 12LPM~30LPM)

A

Relief valve	
Code	Pressure range
A	10 ~ 60 kg.f/cm²
B	50 ~ 150 kg.f/cm²
C	100 ~ 200 kg.f/cm²
D	150 ~ 250 kg.f/cm²
F	50 ~ 120 kg.f/cm² (Flow range 12 LPM ~30 LPM)

Normally Closed	
Normally Open	
Double Lock	
Manual Valve	

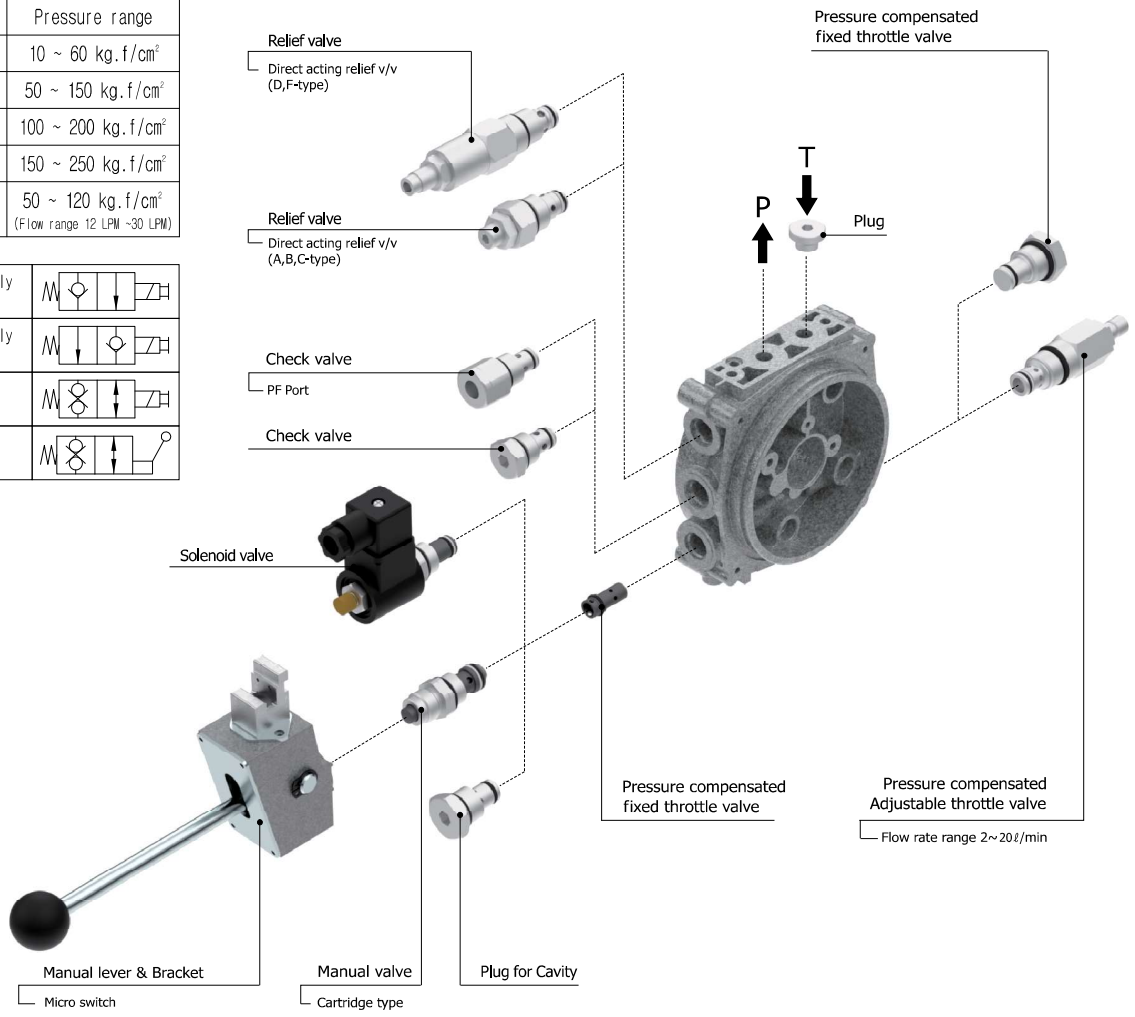

DIMENSION

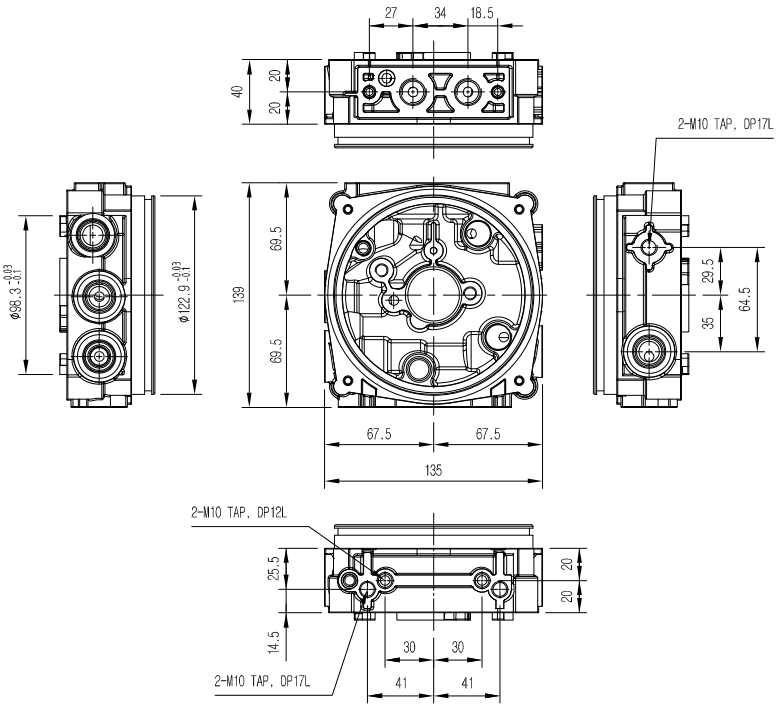

XA Center block

Micro s/w lever type **MHXX**

X CENTER BLOCK SPECIFICATION

DESCRIPTION	MAIN SPECIFICATION
1. Made of Aluminum material 2. Outlet port = PF 1/4" (Options : PT1/4", PF3/8", PT3/8", SAE6) 3. Return port = PF 1/4" (Options : PT1/4", PF3/8", PT3/8", SAE6) P2 : Secondary Work Port = PF1/4" 4. Solenoid valve : Normally closed, Normally open, Double lock selectional 5. Pressure adjustable Relief valve 6. Applicable pump displacement : 0.2 cc/rev ~ 9.8 cc/rev 7. Only "X" series oil tank applicable (refer to page 93 for X series oil tank)	a : Check valve = UNF 3/4" (HC08-2 Cavity) Hydro-tek has two different ·One : Check function only ·Two : Check function & P2 Port b : Relief valve = UNF 3/4" (HC08-2 Cavity) c : Solenoid valve = UNF 3/4" (HC08-2 Cavity) d : Orifice = (HC08-2F Cavity) e : GA = UNF 3/4" (HC08-2 Cavity) f : Lever valve = UNF 3/4" (HC08-2 Cavity) P : Primary Work Port = PF 1/4" P2 : Secondary Work Port = PF 1/4" T : Return Port = PF 1/4"

A

XA1 & XB1

VALVE ASSEMBLY

XA1

XB1

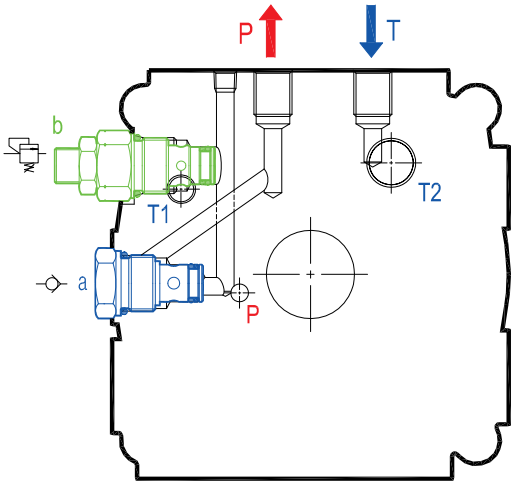

XA1 / XB1

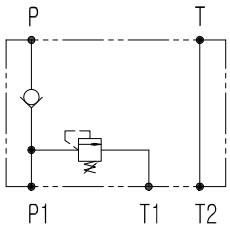

XA1/F14F & XB1/F14F

VALVE ASSEMBLY

XA1/F14F

XB1/F14F

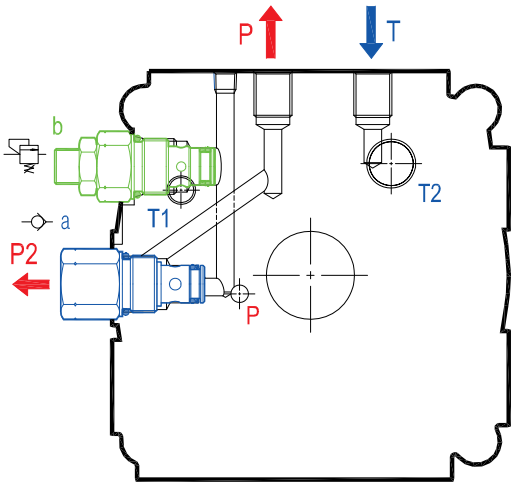

XA1/F14F / XB1/F14F

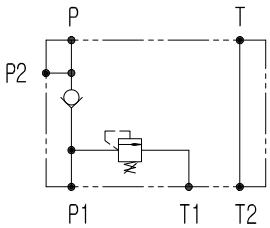

A

XA3 & XB3

VALVE ASSEMBLY

XA3

XB3

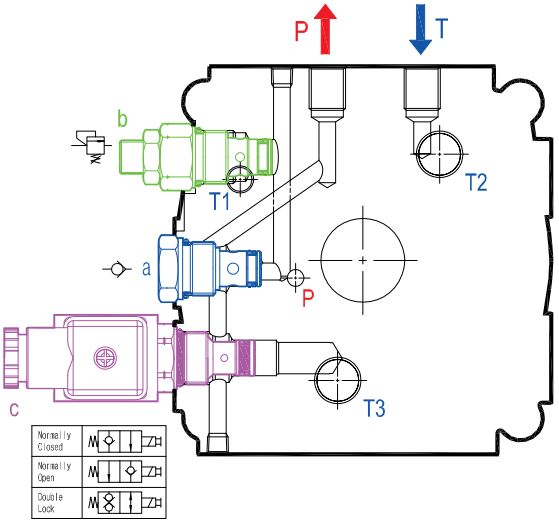

XA3 / XB3

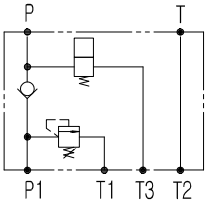

XA3/F14F & XB3/F14F

VALVE ASSEMBLY

XA3/F14F

XB3/F14F

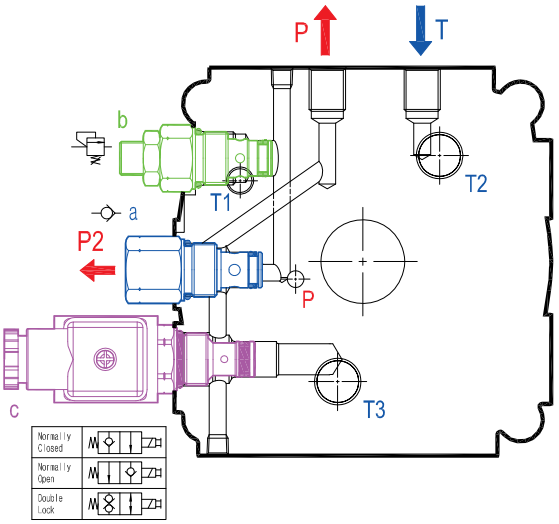

XA3/F14F / XB3/F14F

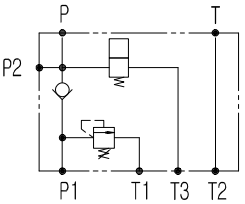

XA5 & XB5

VALVE ASSEMBLY

XA5

XB5

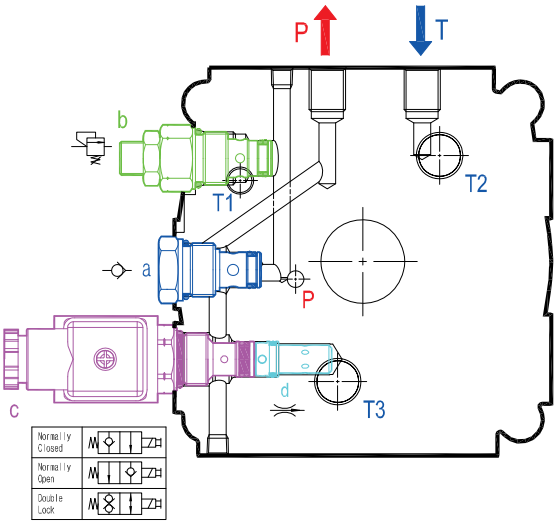

XA5 / XB5

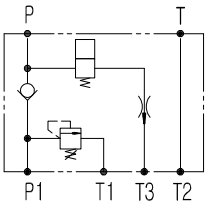

A

XA5/F14F & XB5/F14F

VALVE ASSEMBLY

XA5/F14F

XB5/F14F

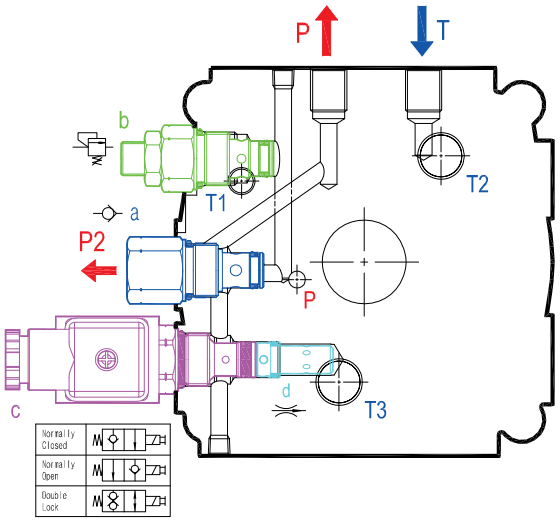

XA5/F14F / XB5/F14F

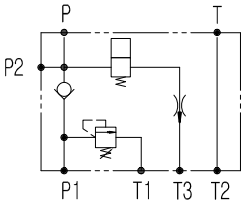

XA7 & XB7

VALVE ASSEMBLY

XA7

XB7

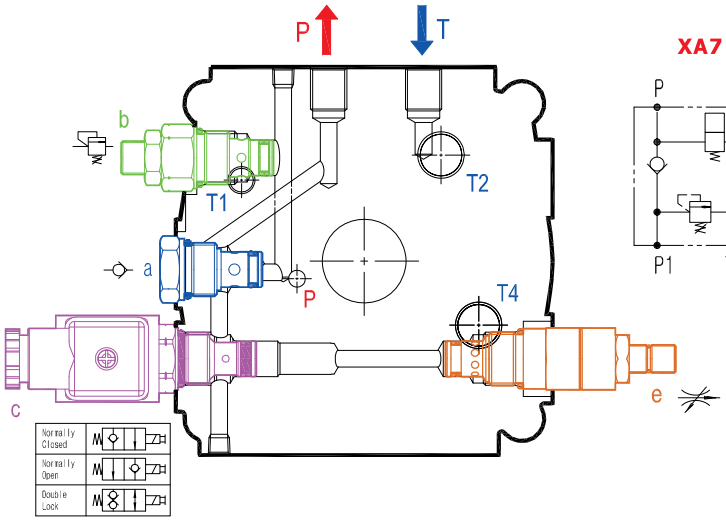

XA7 / XB7

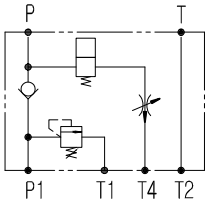

XA7/F14F & XB7/F14F

VALVE ASSEMBLY

XA7/F14F

XB7/F14F

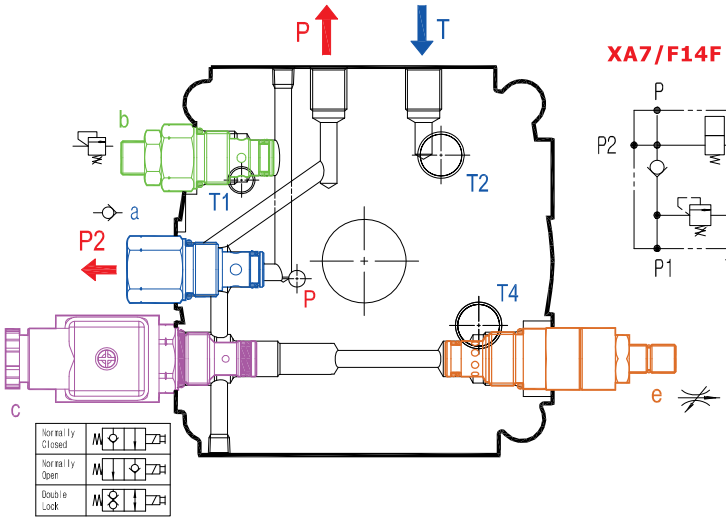

XA7/F14F / XB7/F14F

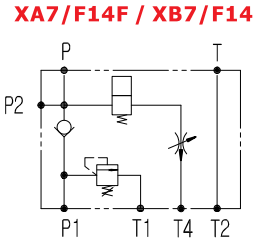

A	XA9 & XB9
VALVE ASSEMBLY	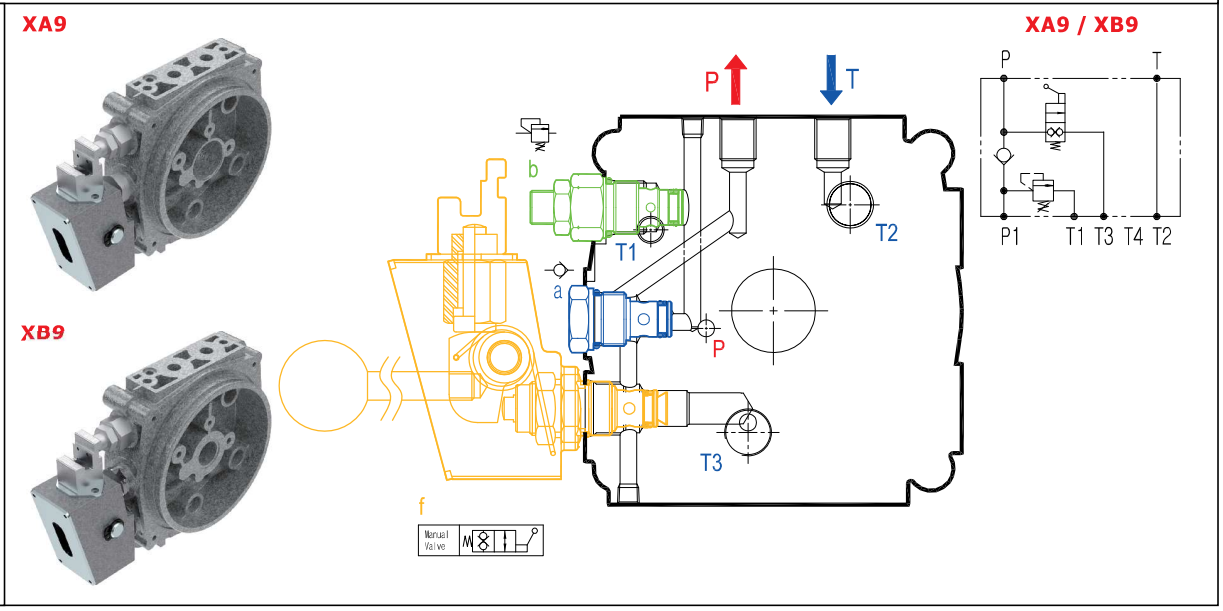

C SERIES BUILT-IN VALVE

A

Relief valve	
Code	Pressure range
A	10 ~ 60 kg.f/cm²
B	50 ~ 150 kg.f/cm²
C	100 ~ 200 kg.f/cm²
D	150 ~ 250 kg.f/cm²
F	50 ~ 120 kg.f/cm² (Flow range 12 LPM ~30 LPM)

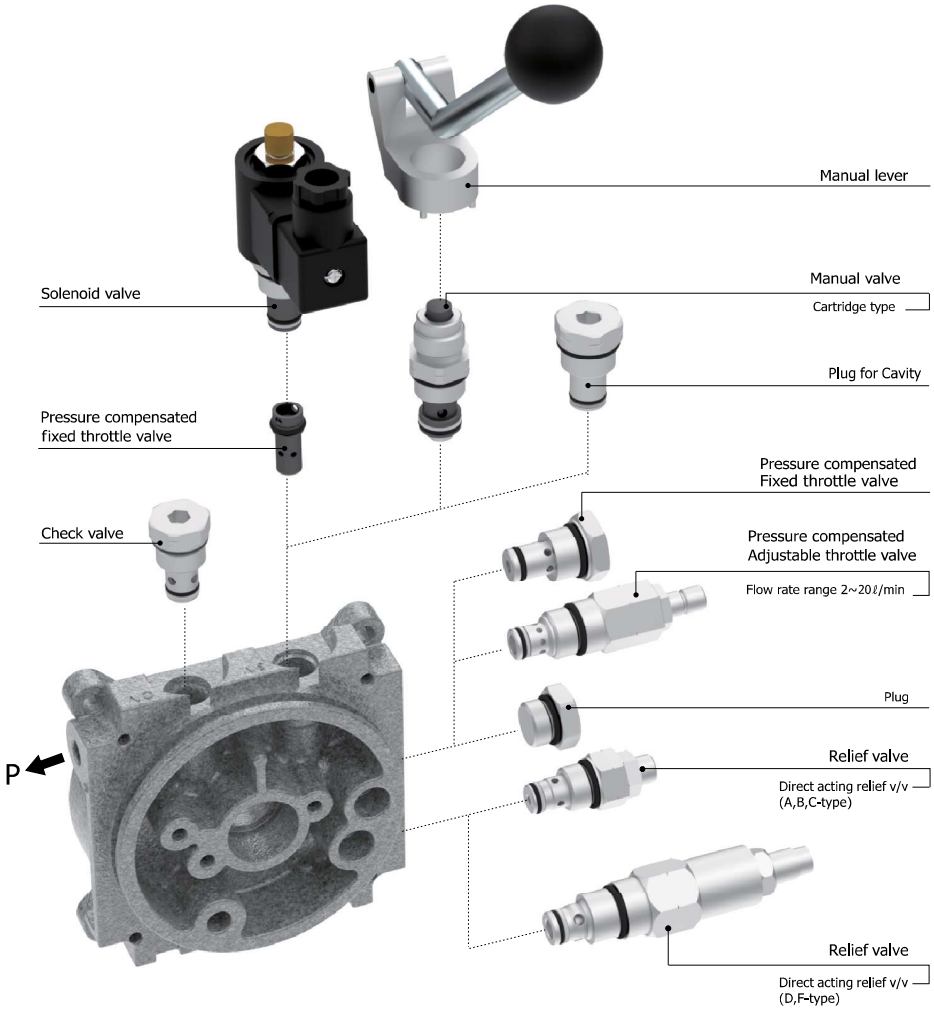

Normally Closed	
Normally Open	
Double Lock	
Manual Valve	

DIMENSION

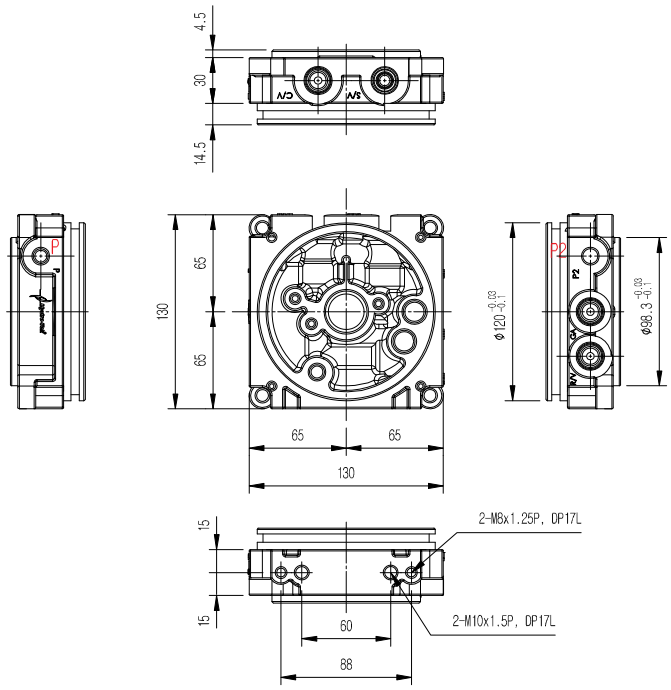

CA Center block

C CENTER BLOCK SPECIFICATION

DESCRIPTION	MAIN SPECIFICATION
1. Made of Aluminum material 2. Outlet port : PF 1/4" (Options : PT1/4", SAE6) 3. Return port : PF 1/4" (Options : PT1/4", SAE6) P2 : Secondary Work Port = PF1/4" 4. Solenoid valve : Normally closed, Normally open, Double lock selectional 5. Pressure adjustable Relief valve 6. Applicable pump displacement : 0.8 cc/rev ~ 9.8 cc/rev 7. Only "C" series oil tank applicable (refer to page 92 for C series oil tank)	a : Check valve = UNF 3/4" (HC08-2 Cavity) b : Relief valve = UNF 3/4" (HC08-2 Cavity) c : Solenoid valve = UNF 3/4" (HC08-2 Cavity) d : Orifice = (HC08-2F Cavity) e : GA = UNF 3/4" (HC08-2 Cavity) f : Lever valve = UNF 3/4" (HC08-2 Cavity) P : Primary Work Port = PF 1/4" P2 : Secondary Work Port = PF1/4" T : Return Port = PF 1/4"

A

CA1 / CA2

VALVE ASSEMBLY

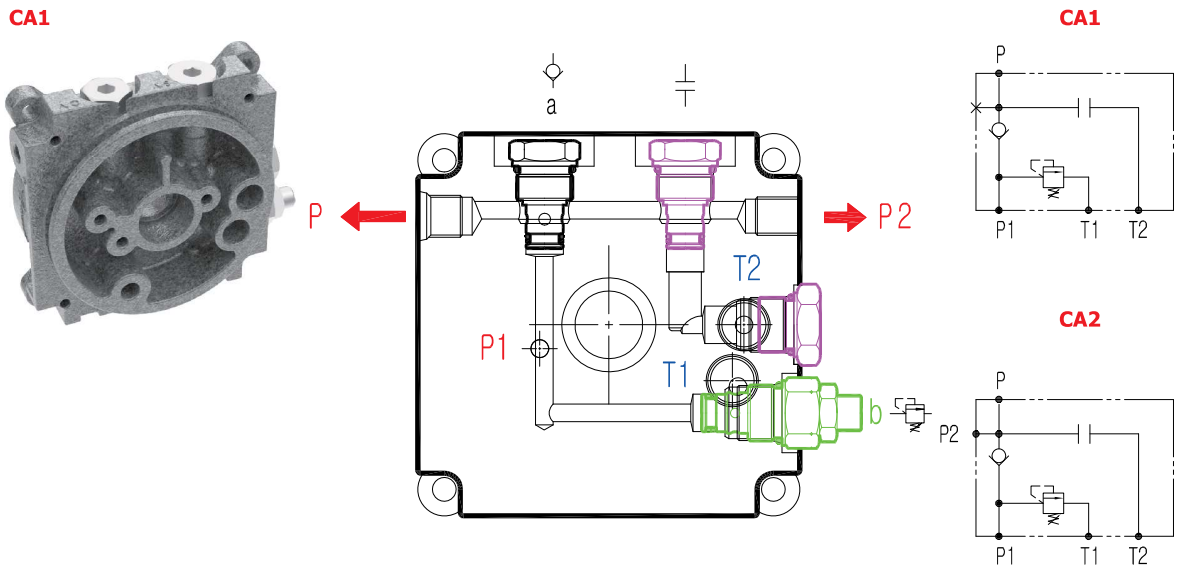

CA3 / CA4

VALVE ASSEMBLY

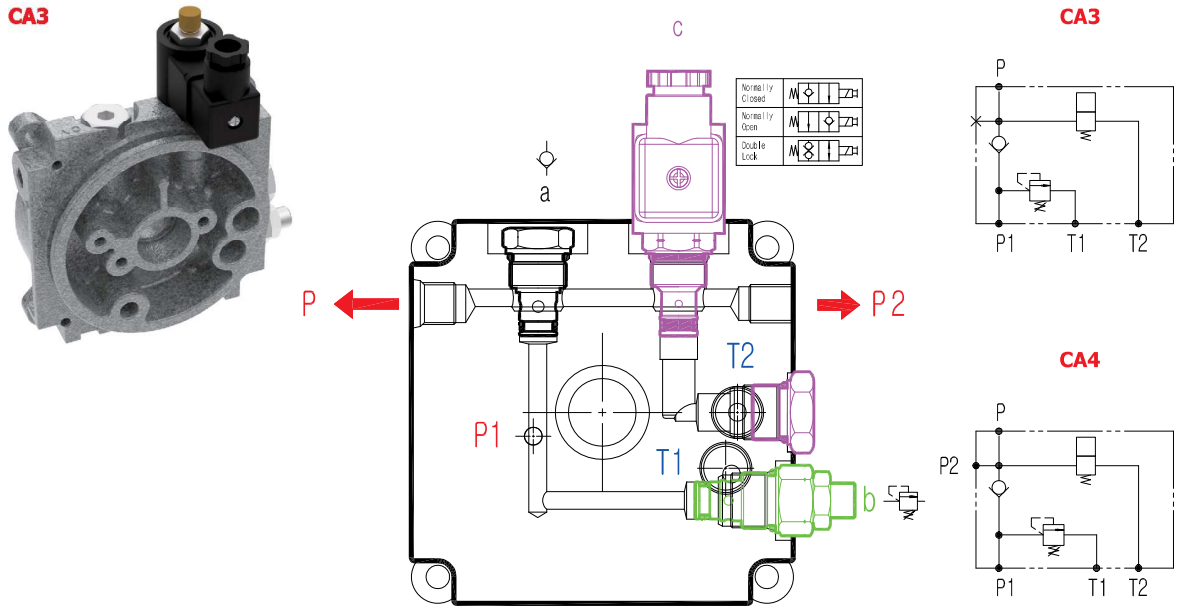

A

CA5 / CA6

VALVE ASSEMBLY

CA5

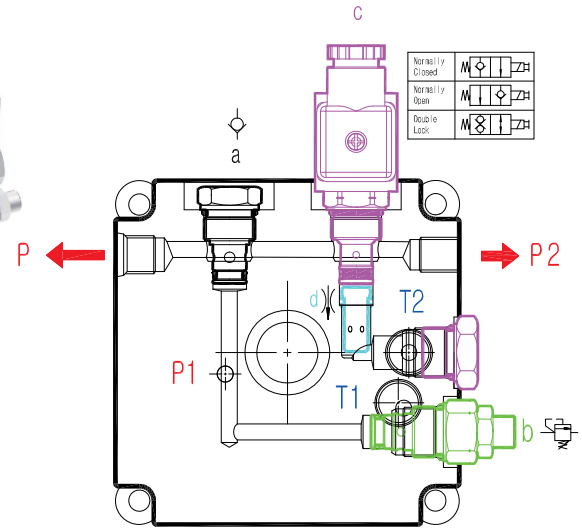

CA5

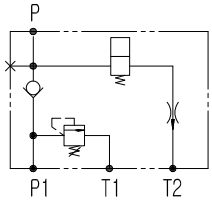

CA6

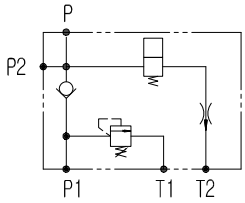

CA7 / CA8

VALVE ASSEMBLY

CA7

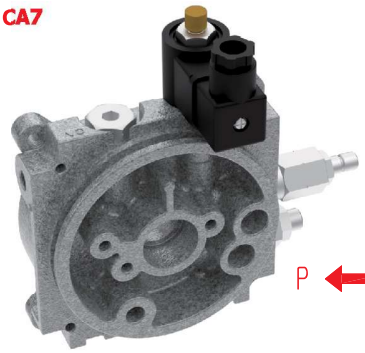

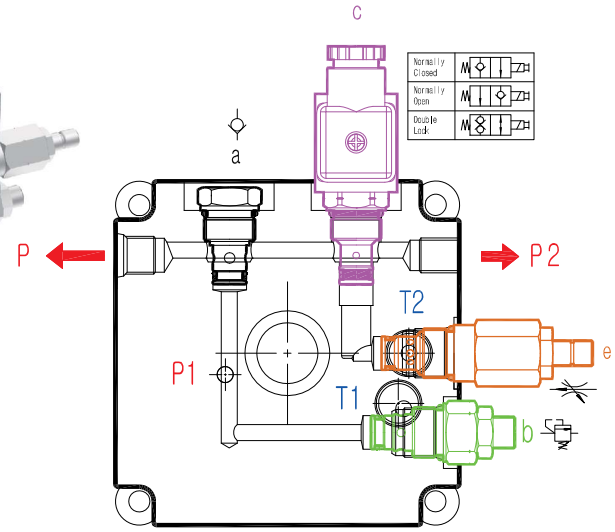

CA7

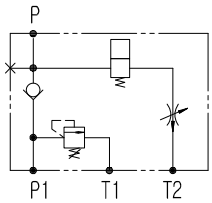

CA8

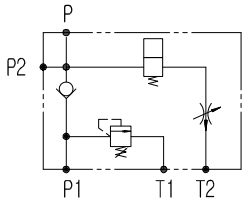

CA9 / CA0

VALVE ASSEMBLY

CA9

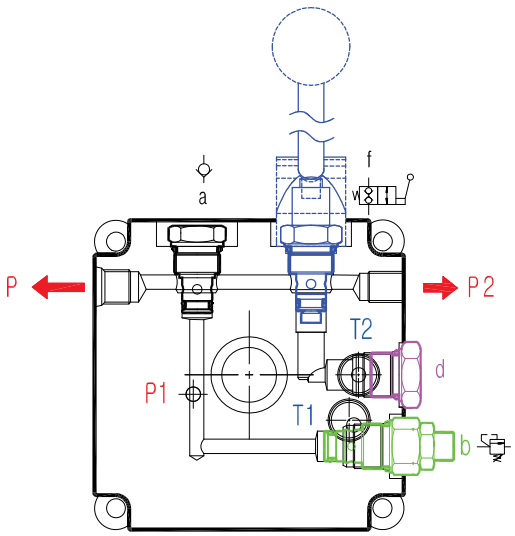

CA9

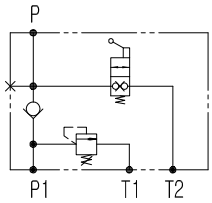

CA0

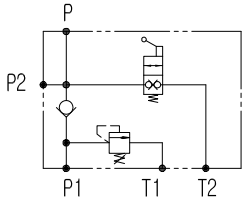

A

Relief valve	
Code	Pressure range
A	10 ~ 60 kg.f/cm²
B	50 ~ 150 kg.f/cm²
C	100 ~ 200 kg.f/cm²

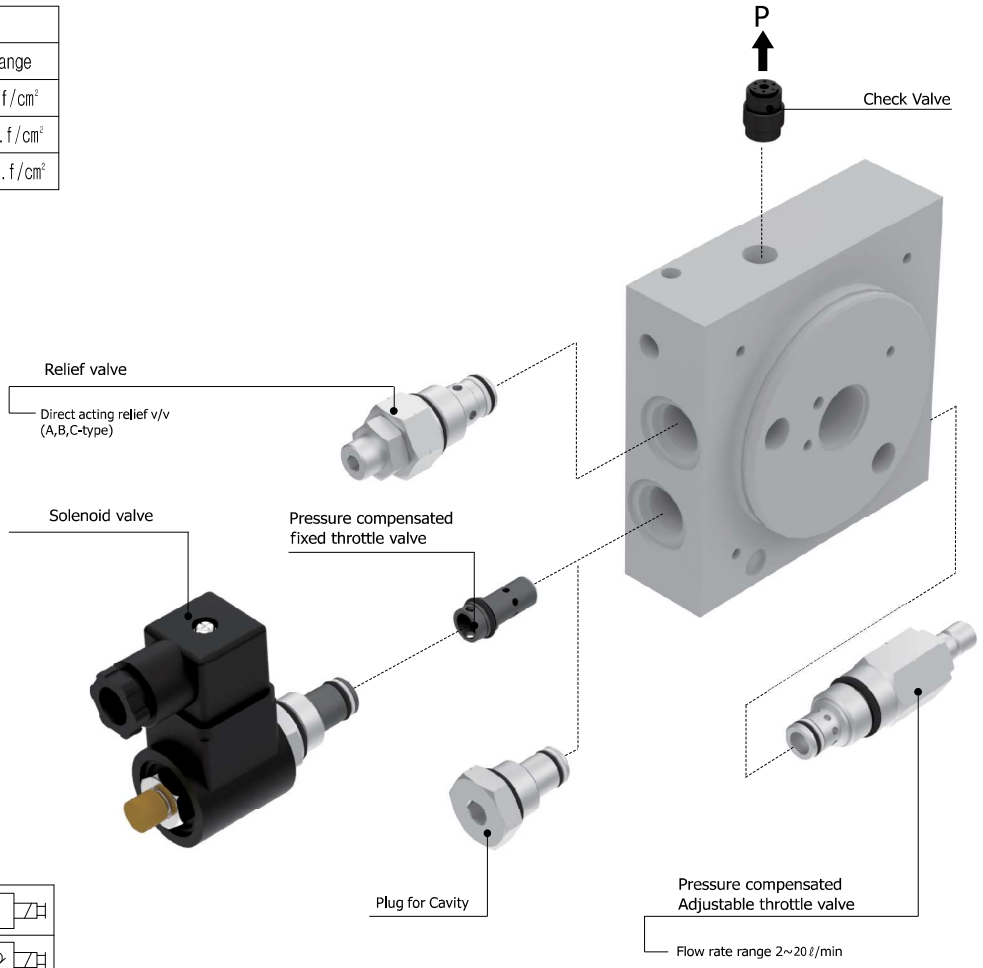

Normally Closed	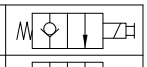
Normally Open	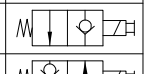
Double Lock	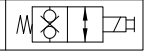

DIMENSION

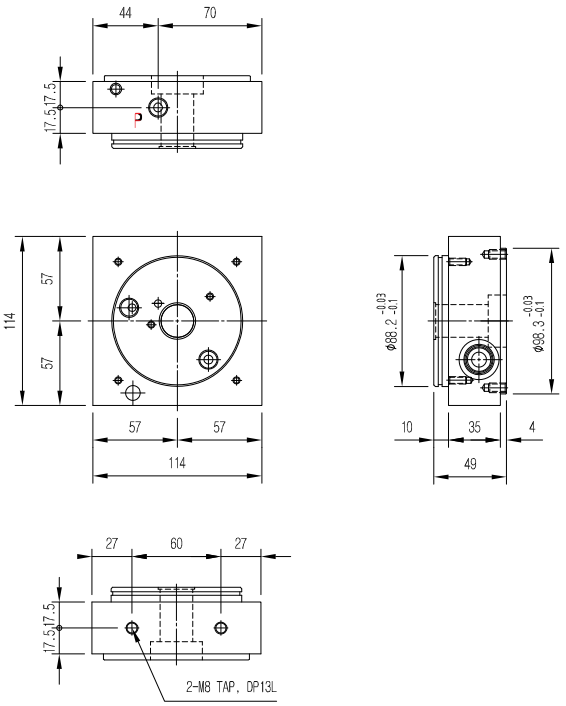

QH CENTER BLOCK SPECIFICATION

DESCRIPTION	MAIN SPECIFICATION
1. Made of Aluminum material 2. Outlet port : PF 1/4" (Options : PF3/8") 3. Return port : PF 1/4" (Options : PF3/8") 4. Solenoid valve : Normally closed, Normally open, Double lock selectional 5. Pressure adjustable Relief valve 6. Applicable pump displacement : 0.2 cc/rev ~ 1.6 cc/rev 7. Only "Q" series oil tank applicable (refer to page 96 for Q series oil tank)	a : Check valve = PF 1/4" (HC14-2 Cavity) b : Relief valve = UNF 3/4" (HC08-2 Cavity) c : Solenoid valve = UNF 3/4" (HC08-2 Cavity) d : Orifice = (HC08-2F Cavity) e : GA = UNF 3/4" (HC08-2 Cavity) P : Primary Work Port = PF 1/4" P2 : Secondary Work Port = PT 1/8" T : Return Port = PF 1/4" (Option)

A

QH1 / QH2

VALVE ASSEMBLY

QH1 / QH2

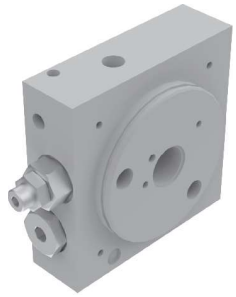

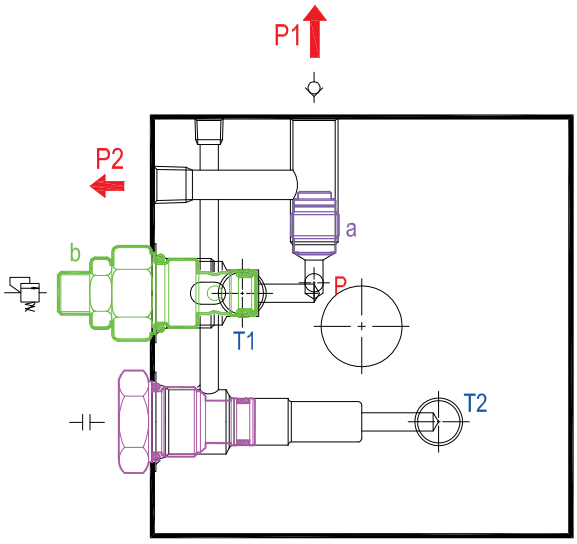

QH1

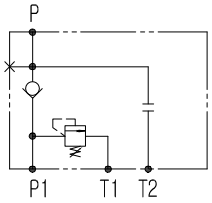

QH2

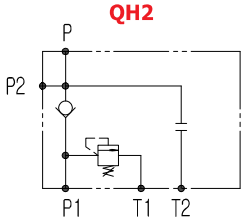

QH3 / QH4

VALVE ASSEMBLY

QH3 / QH4

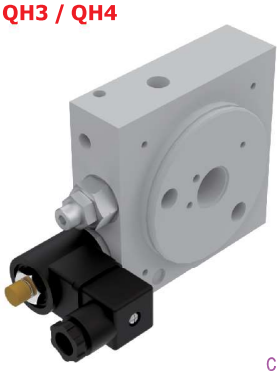

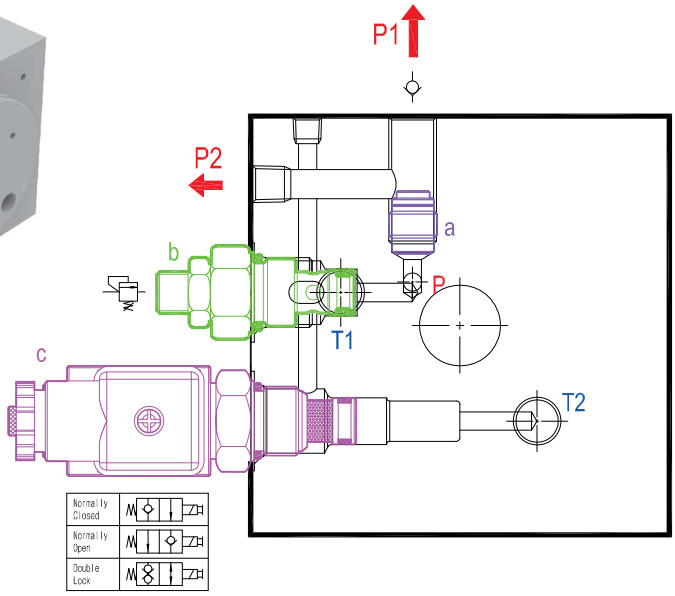

QH3

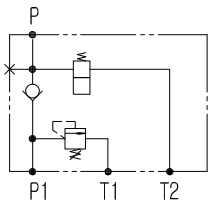

QH4

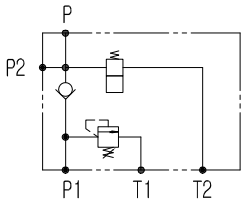

A

QH5 / QH6

VALVE ASSEMBLY

QH5 / QH6

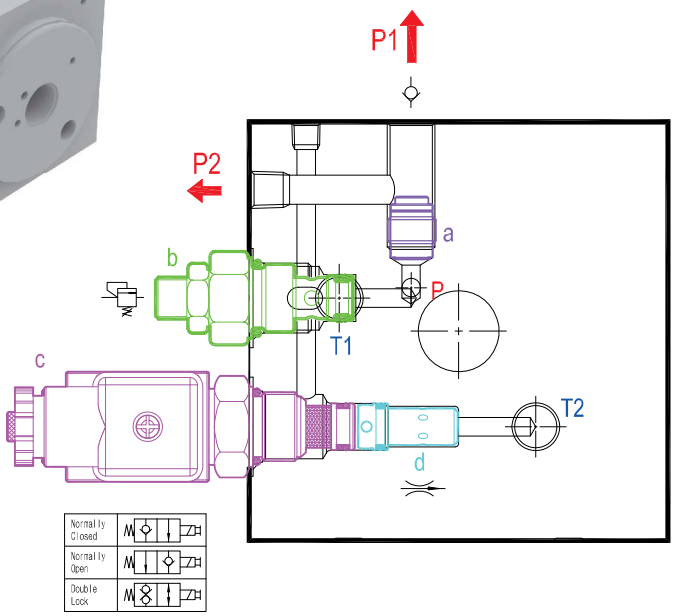

QH5

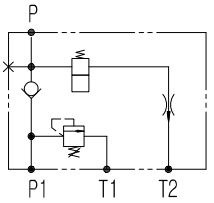

QH6

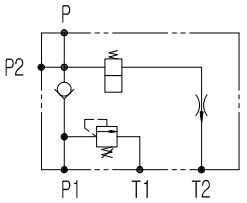

QH7 / QH8

VALVE ASSEMBLY

QH7 / QH8

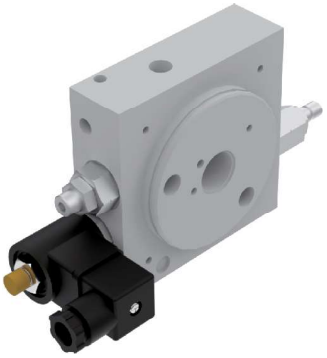

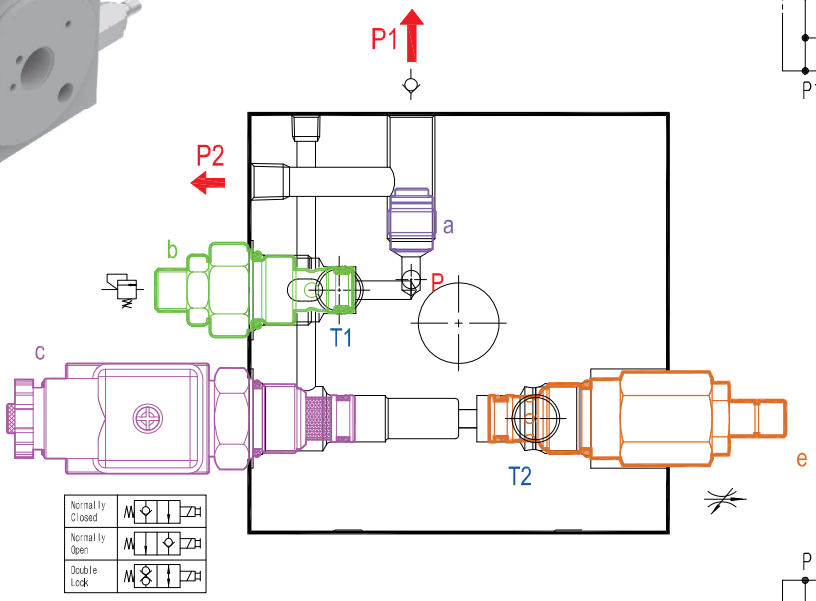

QH7

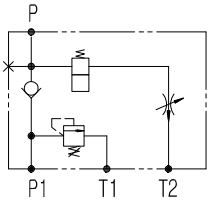

QH8

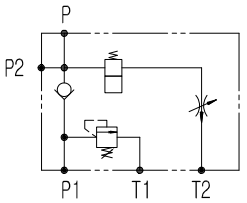

SH SERIES BUILT-IN VALVE

A

Relief valve	
Code	Pressure range
A	10 ~ 60 kg.f/cm²
B	50 ~ 150 kg.f/cm²
C	100 ~ 200 kg.f/cm²

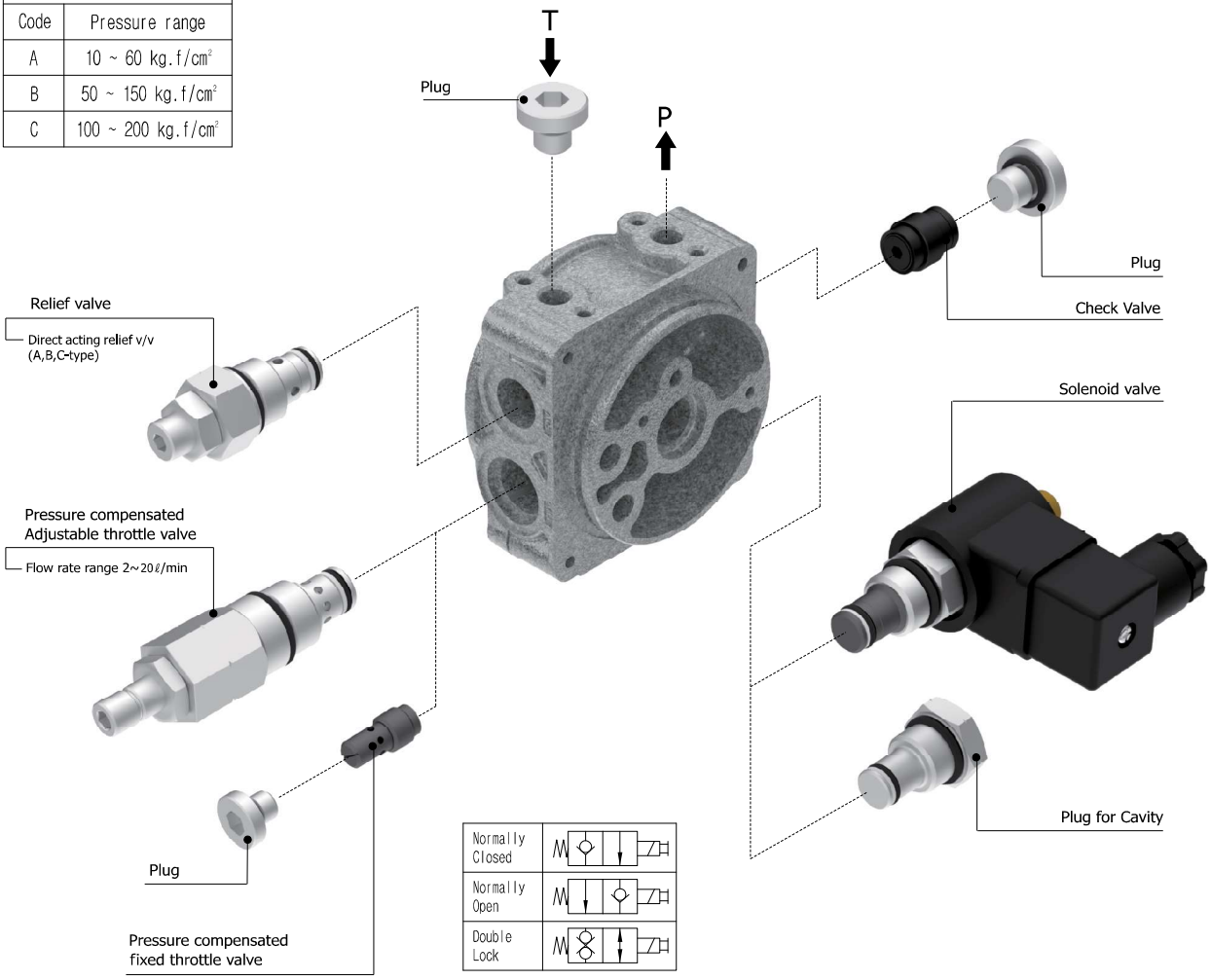

DIMENSION

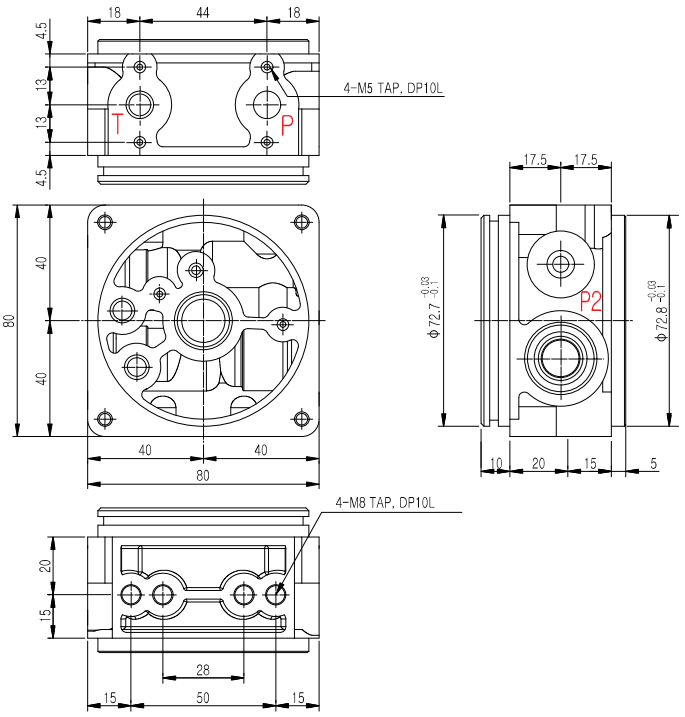

SH CENTER BLOCK SPECIFICATION

DESCRIPTION	MAIN SPECIFICATION
1. Made of Aluminum material	a : Check valve = PF 1/4" (HC14-2 Cavity)
2. Outlet port : PF 1/4" (Options : PT1/4")	b : Relief valve = UNF 3/4" (HC08-2 Cavity)
3. Return port : PF 1/4" (Options : PT1/4")	c : Solenoid valve = UNF 3/4" (HC08-2 Cavity)
4. Solenoid valve : Normally closed, Normally open, Double lock selectional	d : Orifice = PF 1/4"
5. Pressure adjustable Relief valve	e : GA = UNF 3/4" (HC08-2 Cavity)
6. Applicable pump displacement : 0.2 cc/rev ~ 1.6 cc/rev	P : Primary Work Port = PF 1/4"
7. Only "S" series oil tank applicable (refer to page 97 for S series oil tank)	P2 : Secondary Work Port = PF 1/4"
	T : Return Port = PF 1/4" (Option)

A

SH1 / SH2

VALVE ASSEMBLY

SH1

SH2

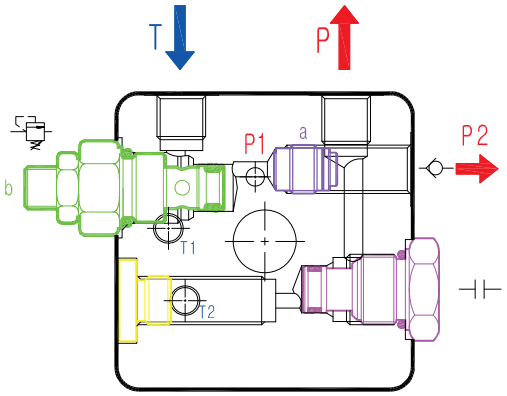

SH1

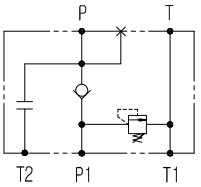

SH2

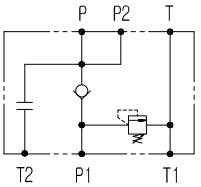

VALVE ASSEMBLY

SH3

SH4

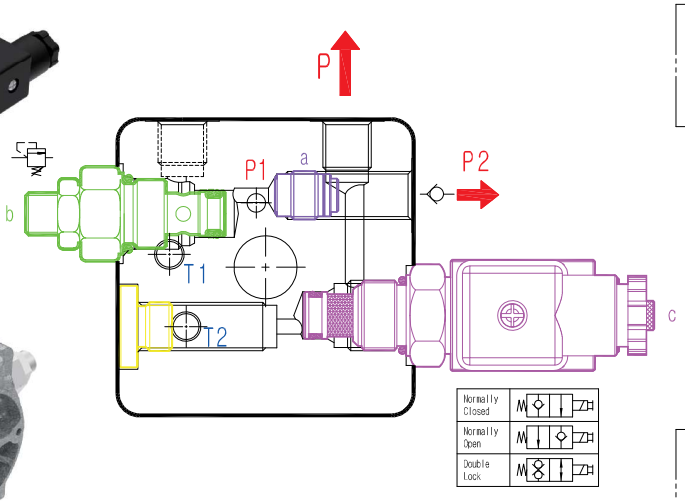

SH3

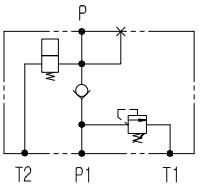

SH4

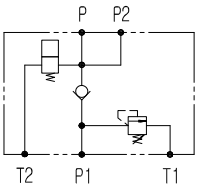

A

SH5 / SH6

VALVE ASSEMBLY

SH5

SH5

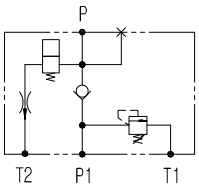

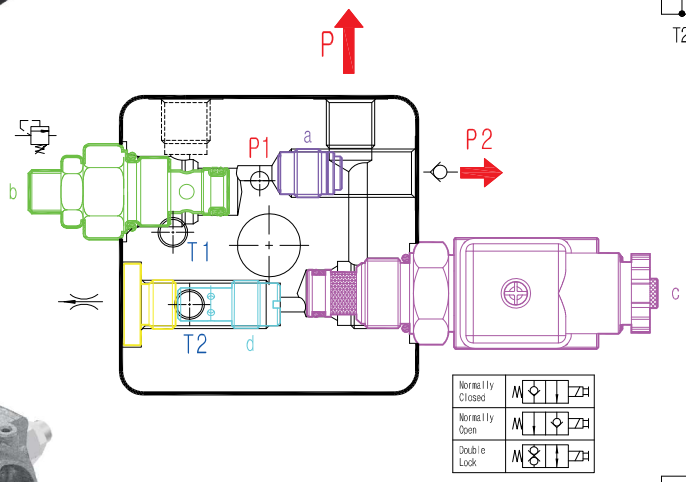

SH6

SH6

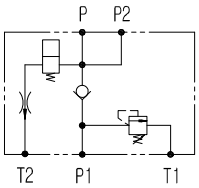

SH7 / SH8

VALVE ASSEMBLY

SH7

SH7

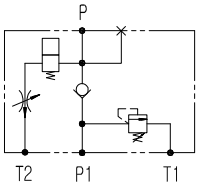

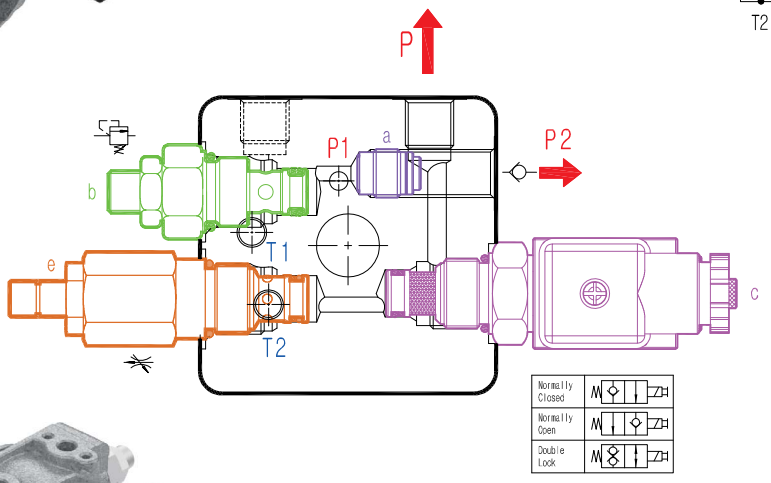

SH8

SH8

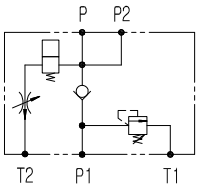

QD CENTER BLOCK SPECIFICATION

DESCRIPTION	MAIN SPECIFICATION
1. Made of Aluminum material 2. Outlet port : PF 1/4" (Options : PT1/4") 3. Pressure adjustable Relief valve 4. Applicable pump displacement : 0.2 cc/rev ~ 1.1 cc/rev 5. Only "Q" series oil tank applicable (refer to page 96 for Q series oil tank) 6. This block is available only for bi-directional gear pump	a : Pilot check valve = UNF 3/4" (Pilot Check Valve Cavity) b : Relief valve = UNF 3/4" (HC08-2 Cavity) P1, P2 : Primary Work Port = PF 1/4"

A

DIMENSION & DIAGRAM

B

1

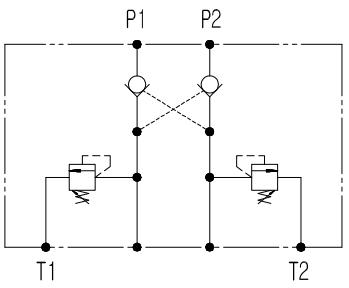

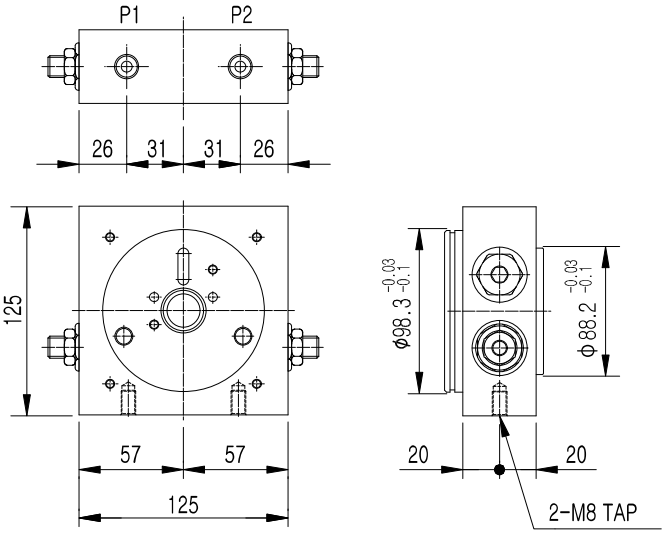

VALVE ASSEMBLY

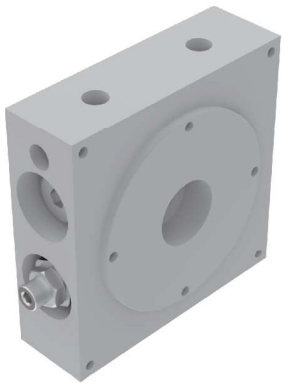

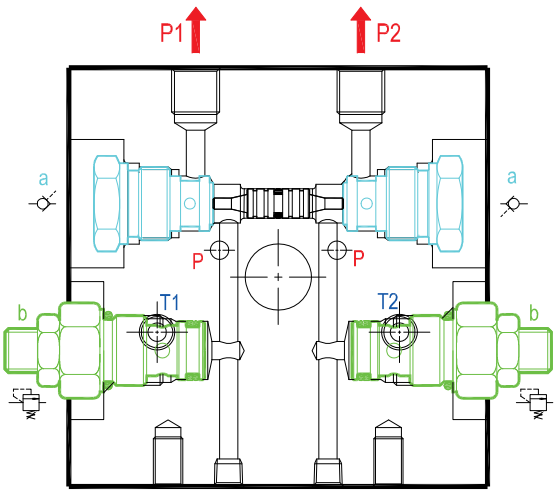

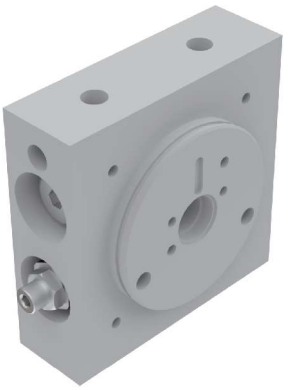

SD CENTER BLOCK SPECIFICATION

DESCRIPTION	MAIN SPECIFICATION
1. Made of Aluminum material 2. Outlet port : PF 1/4" (Options : PT1/4") 3. Pressure adjustable Relief valve 4. Applicable pump displacement : 0.2 cc/rev ~ 1.1 cc/rev 5. Only "S" series oil tank applicable (refer to page 97 for S series oil tank) 6. This block is available only for bi-directional gear pump	a : Pilot check valve = M20x1.5P (Pilot Check Valve Cavity) b : Relief valve = M10x1P (Mini Relief Cavity) P1, P2 : Primary Work Port = PF 1/4"

A

DIMENSION & DIAGRAM

B

1

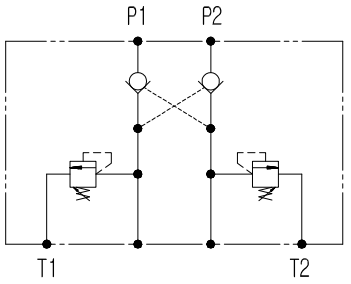

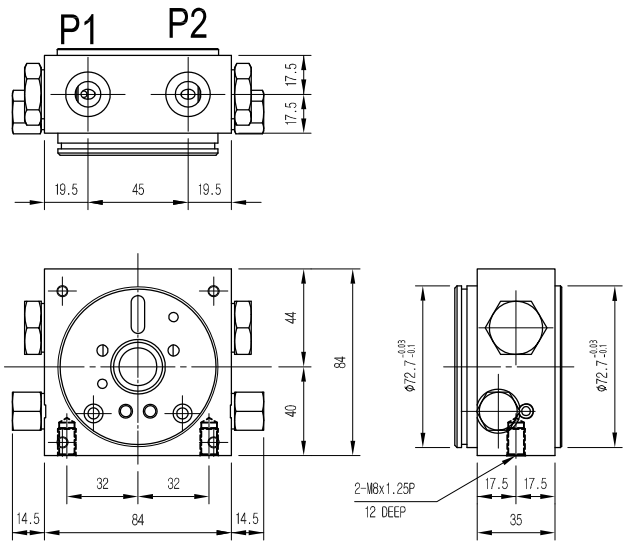

VALVE ASSEMBLY

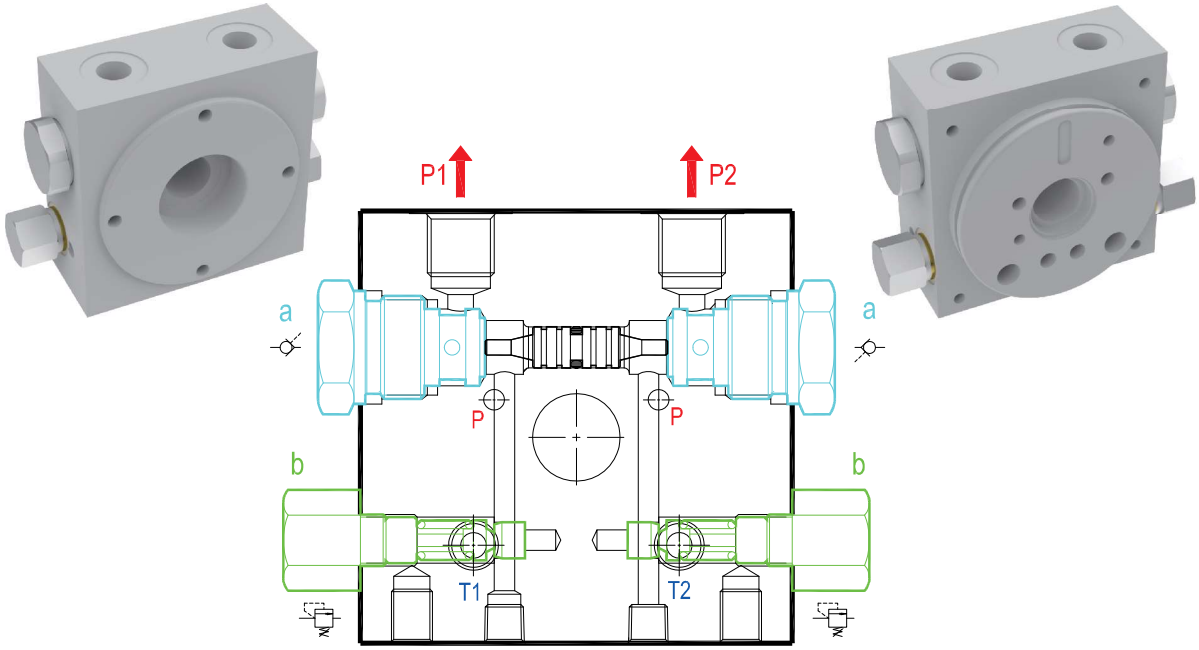

D-SERIES CENTER BLOCK

A	ONE GROUP	HALF GROUP
	DA	DB

CENTER BLOCK DIAGRAM

B			
ITEM CODE	1	2
DIAGRAM	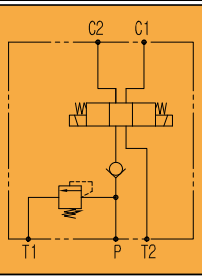	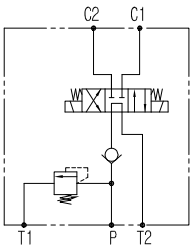
APPLICABLE VALAE	YAXX1C, YPXX1C, YOXX1C	YCXX1C
ITEM CODE	3	4
DIAGRAM	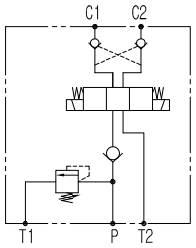	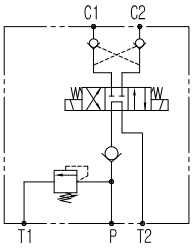
APPLICABLE VALAE	YAXX1C, YPXX1C, YOXX1C	YCXX1C
ITEM CODE	5	6
DIAGRAM	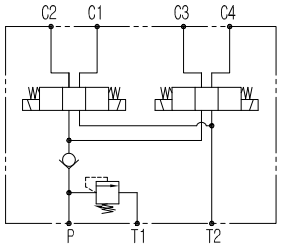	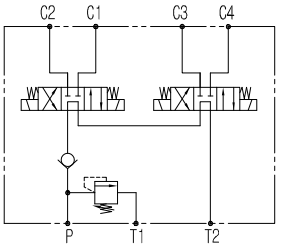
APPLICABLE VALAE	YAXX1C, YPXX1C	YCXX1C
ITEM CODE	7	8
DIAGRAM	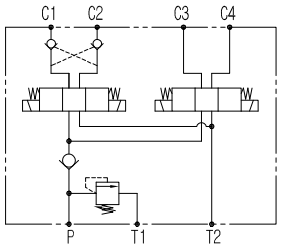	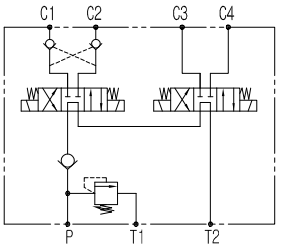
APPLICABLE VALAE	YAXX1C, YPXX1C	YCXX1C
ITEM CODE	9	0
DIAGRAM	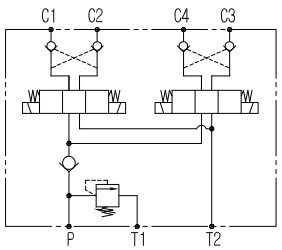	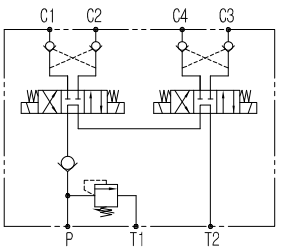
APPLICABLE VALAE	YAXX1C, YPXX1C	YCXX1C

D-SERIES CENTER BLOCK

B

ITEM CODE	A	B
DIAGRAM	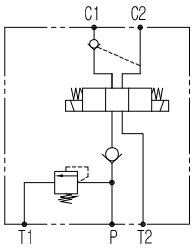	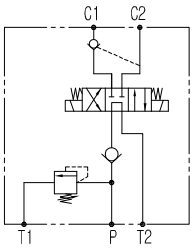
APPLICABLE VALAE	YAXX1C, YPXX1C, YOXX1C	YCXX1C
ITEM CODE	C	D
DIAGRAM	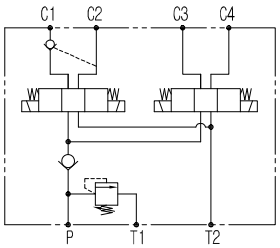	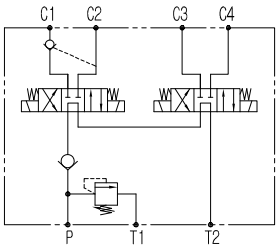
APPLICABLE VALAE	YAXX1C, YPXX1C	YCXX1C
ITEM CODE	E	F
DIAGRAM	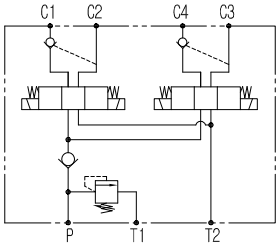	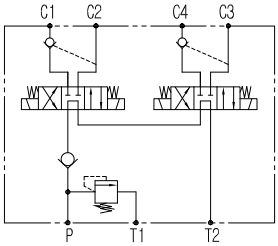
APPLICABLE VALAE	YAXX1C, YPXX1C	YCXX1C
ITEM CODE	G	I
DIAGRAM	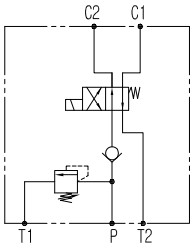	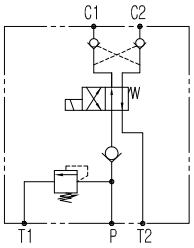
APPLICABLE VALAE	HIXX1C	HIXX1C
ITEM CODE	K	
DIAGRAM	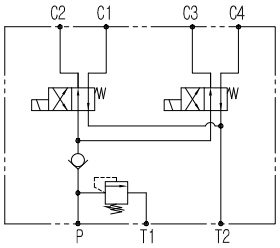	
APPLICABLE VALAE	HIXX1C	

C

RELIEF VALVE PRESSURE RANGE					
Code	A	B	C	D	F
Pressure range	10 ~ 60 kg·f/㎠	50 ~ 150 kg·f/㎠	100 ~ 200 kg·f/㎠	150 ~ 250 kg·f/㎠	50 ~ 120 kg·f/㎠ (flow range 12LPM~30LPM)

D SERIES BUILT-IN VALVE

A

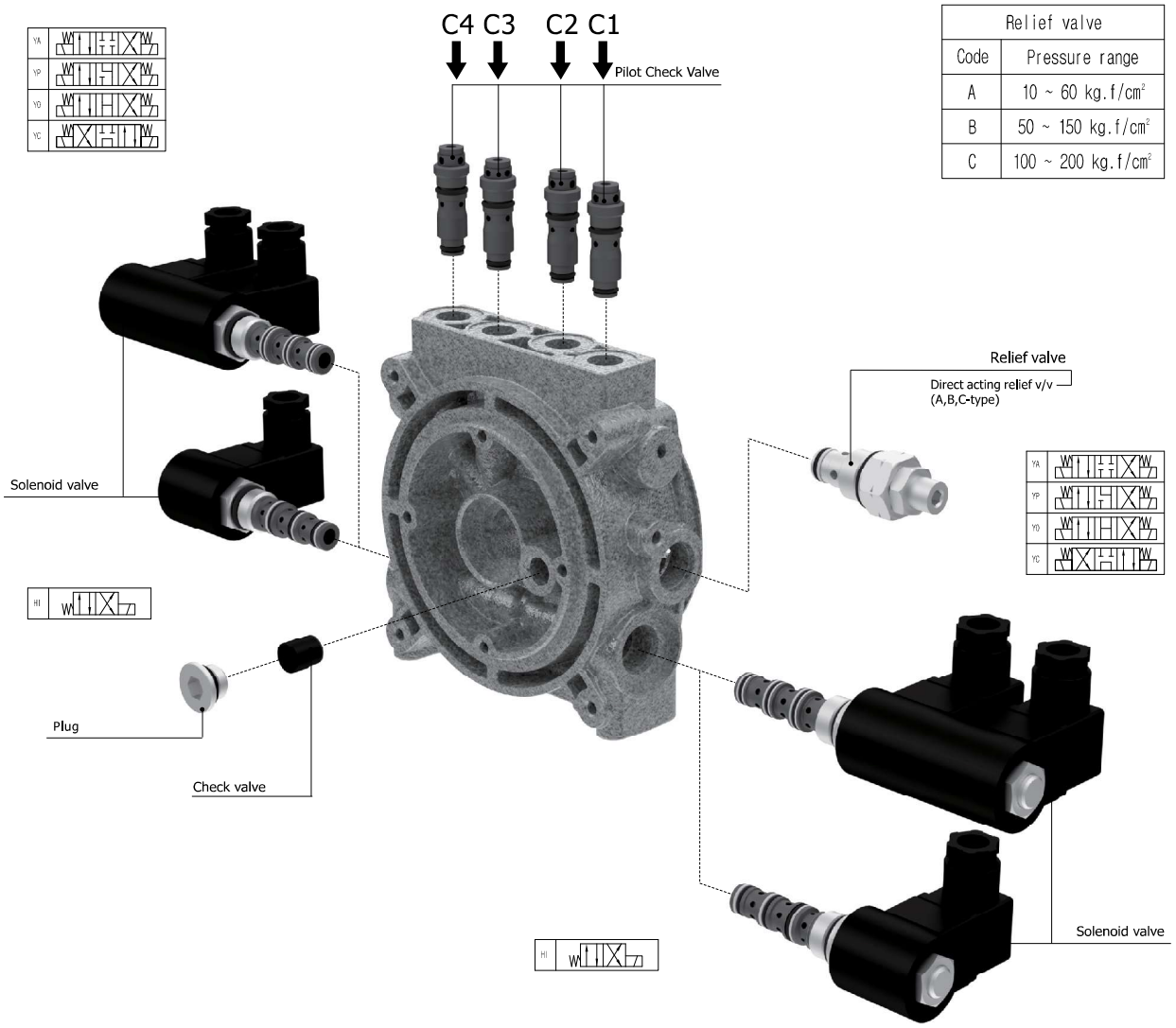

Relief valve	
Code	Pressure range
A	10 ~ 60 kg.f/cm²
B	50 ~ 150 kg.f/cm²
C	100 ~ 200 kg.f/cm²

DIMENSION

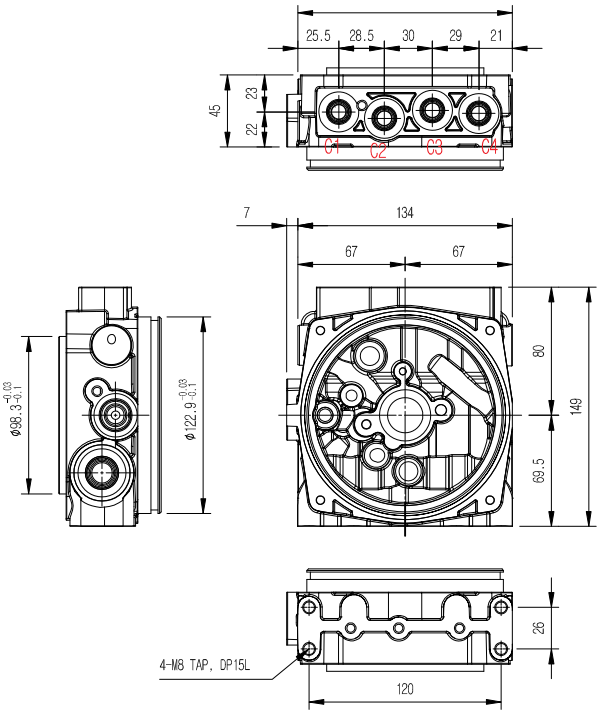

DA Center block

DB Center block

D CENTER BLOCK SPECIFICATION

DESCRIPTION	MAIN SPECIFICATION
1. Made of Aluminum material 2. Outlet port : SAE #6_UNF 9/16" (Options : PF3/8") 3. Pressure adjustable Relief valve 4. Applicable pump displacement : 0.2 cc/rev ~ 9.8 cc/rev 5. Only "X" series oil tank applicable (refer to page 93 for X series oil tank)	a : Check valve = JIS1/4" (HC14-2 Cavity) b : Relief valve = UNF 3/4" (HC08-2 Cavity) c : Solenoid valve = UNF 3/4" (HC08-4 Cavity) d : Pilot check valve = SAE-6 (HC06-S Cavity) Port 1, 2, 3, 4 : Primary Work Port = SAE #6_UNF 9/16"

A

DA1 / DB1 & DA2 / DB2

VALVE ASSEMBLY

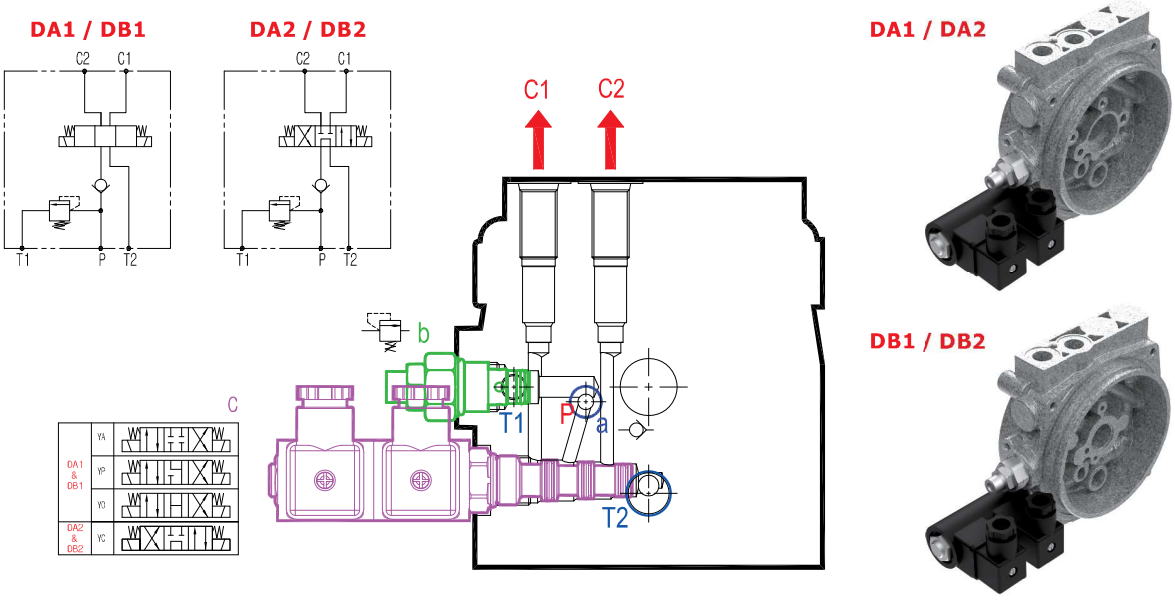

DA3 / DB3 & DA4 / DB4

VALVE ASSEMBLY

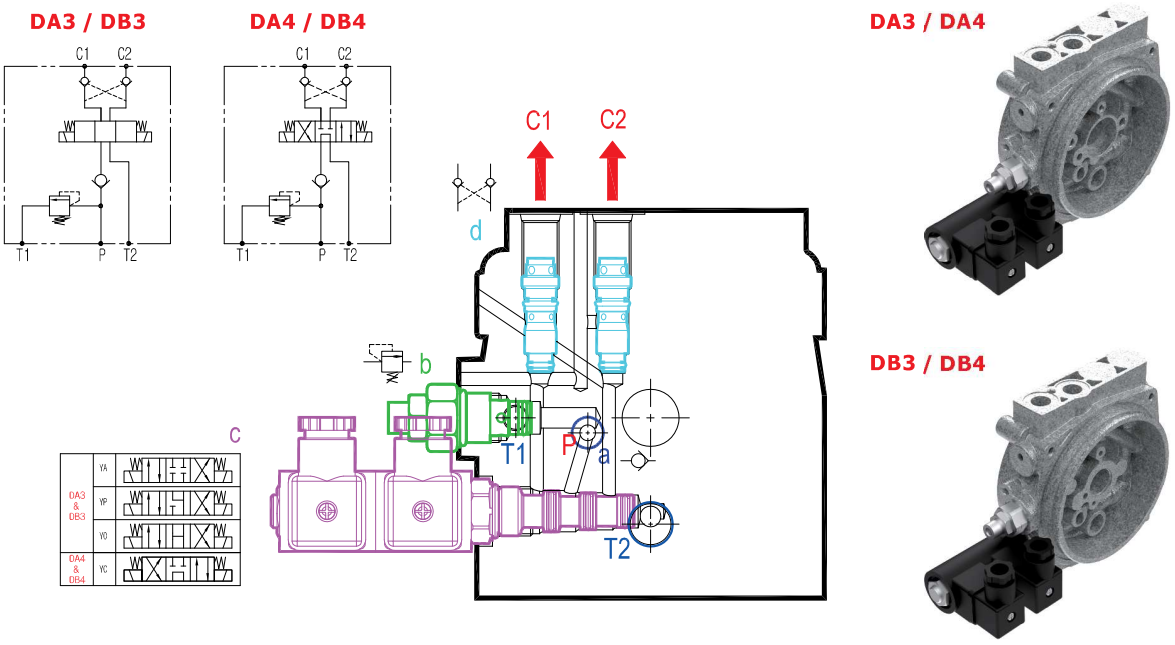

A

DA5 / DB5 & DA6 / DB6

VALVE ASSEMBLY

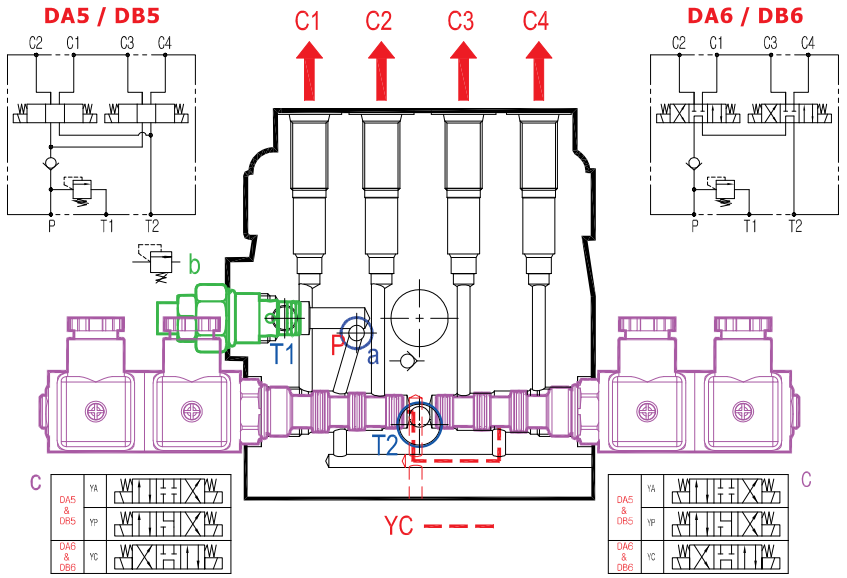

DA7 / DB7 & DA8 / DB8

VALVE ASSEMBLY

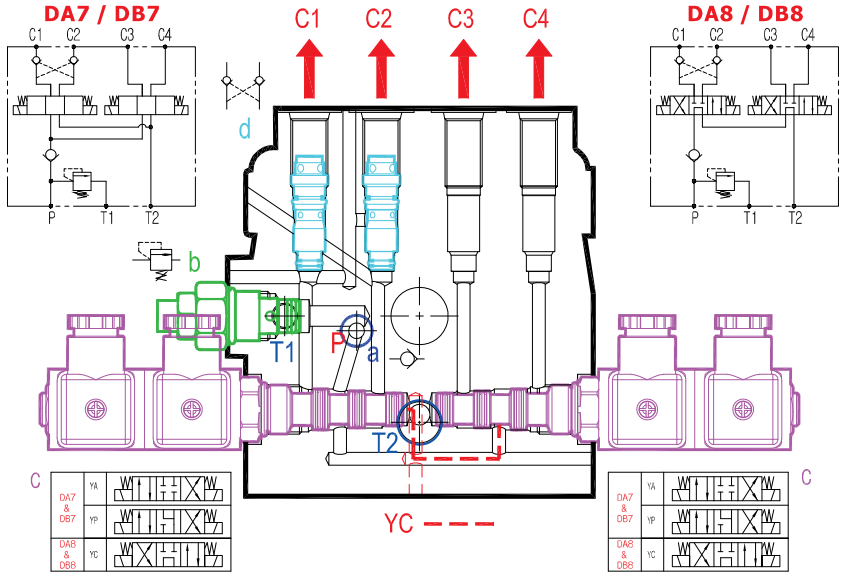

DA9 / DB9 & DA0 / DB0

VALVE ASSEMBLY

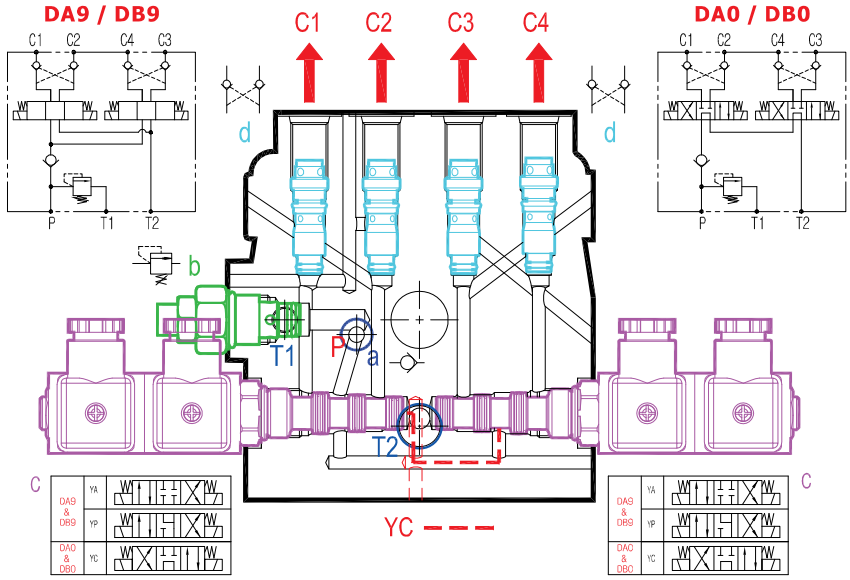

A

DAA / DBA & DAB / DBB

VALVE ASSEMBLY

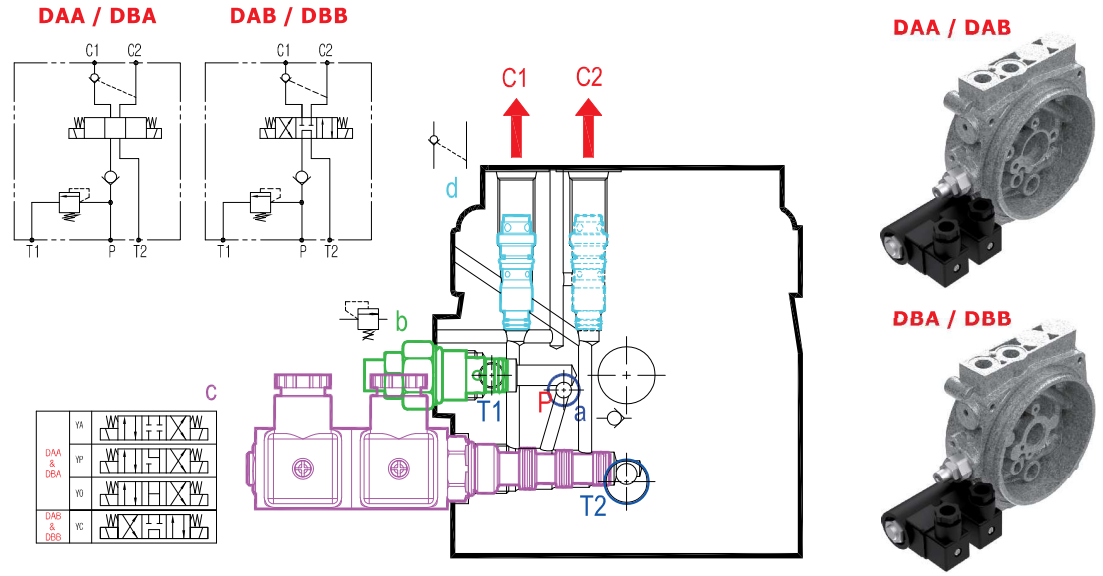

DAC / DBC & DAD / DBD

VALVE ASSEMBLY

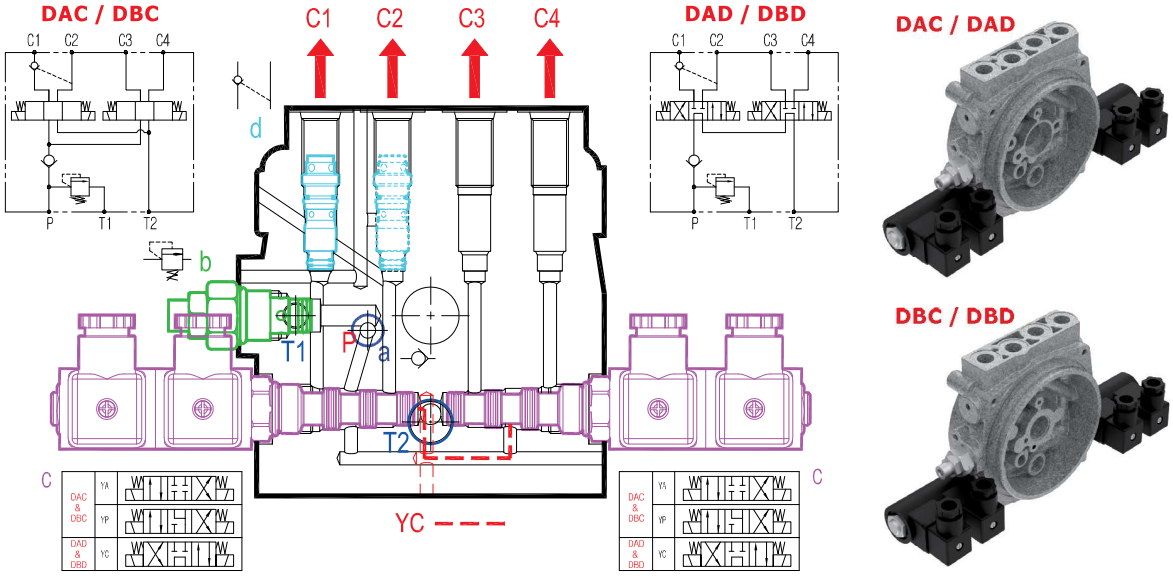

DAE / DBE & DAF / DBF

VALVE ASSEMBLY

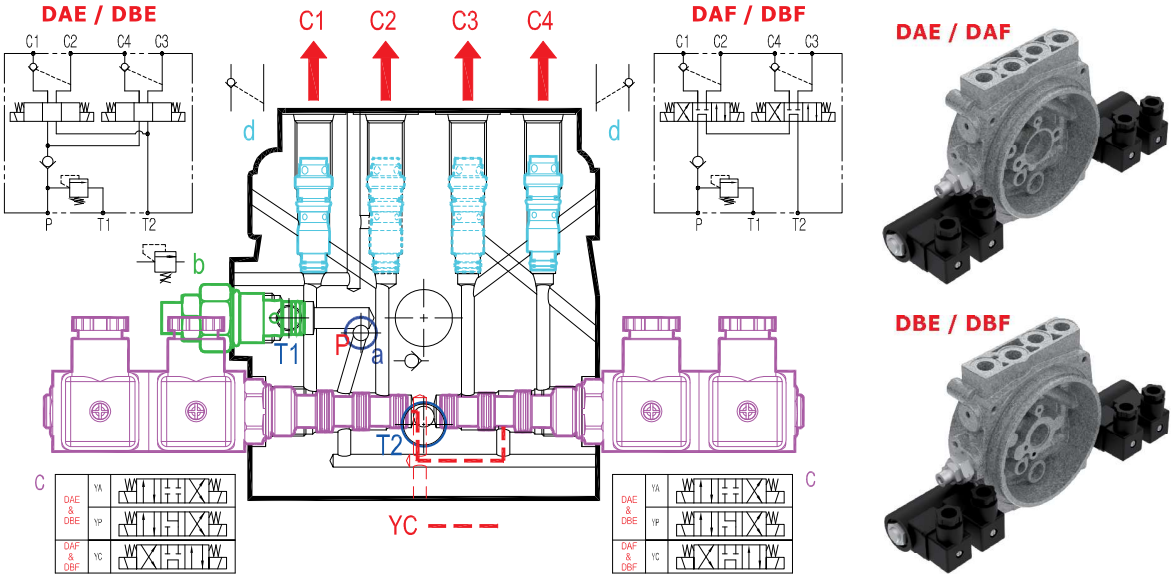

A

DAG / DBG

VALVE ASSEMBLY

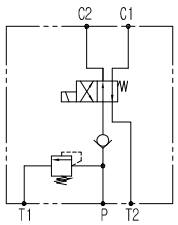

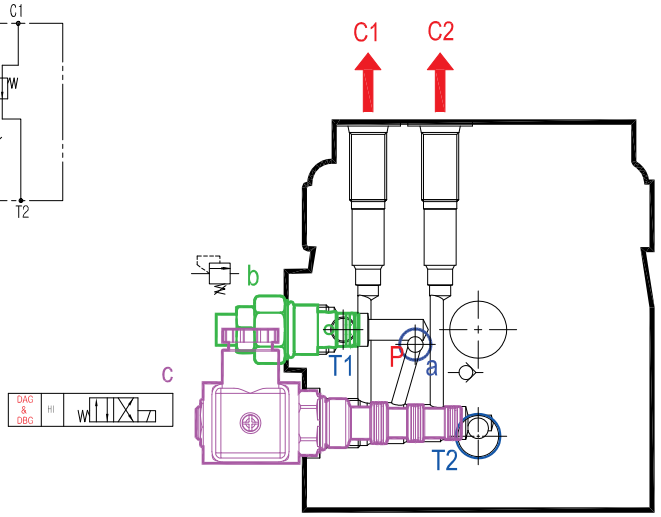

DAI / DBI

VALVE ASSEMBLY

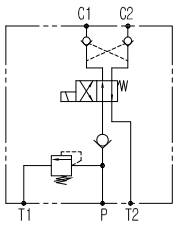

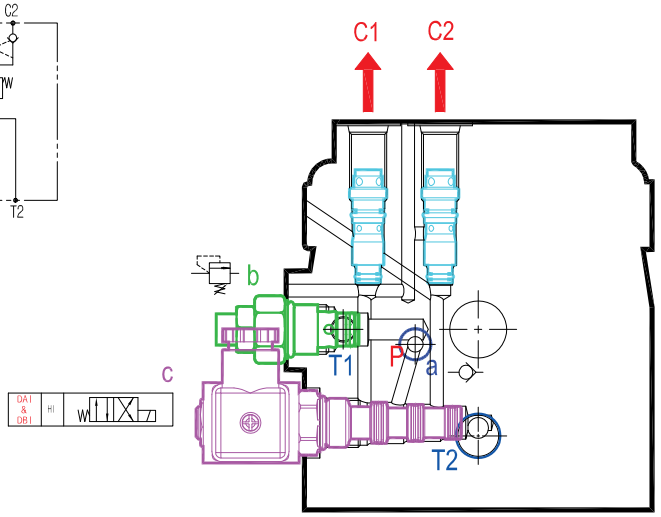

DAK / DBK

VALVE ASSEMBLY

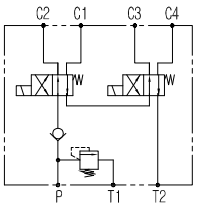

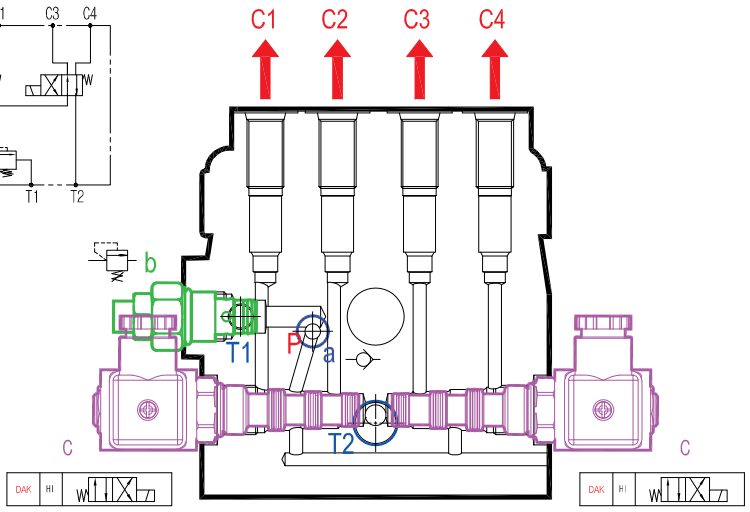

2 T A 1 C
A / B / C

T-SERIES CENTER BLOCK

A	ONE GROUP
	TA

CENTER BLOCK DIAGRAM

B	ITEM CODE	1	2
	DIAGRAM	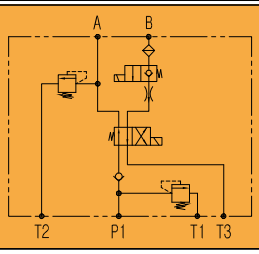	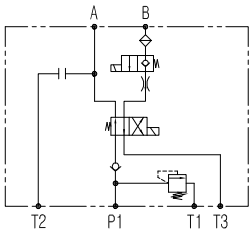
	APPLICABLE VALAE	HIXX1C	HIXX1C
	ITEM CODE	3	4
	DIAGRAM	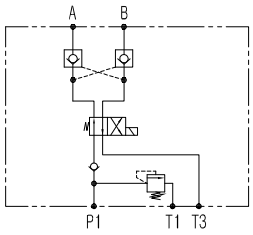	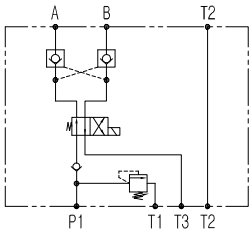
	APPLICABLE VALAE	HIXX1C	HIXX1C
	ITEM CODE	5	6
	DIAGRAM	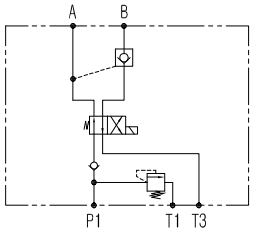	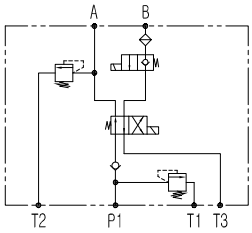
	APPLICABLE VALAE	HIXX1C	HIXX1C
	ITEM CODE	7	8
	DIAGRAM	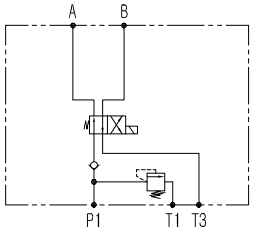	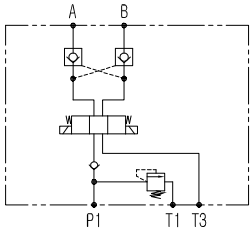
	APPLICABLE VALAE	HIXX1C	YAXX1C, YPXXIC, YOXX1C, YCXX1C
	ITEM CODE	9	0
	DIAGRAM	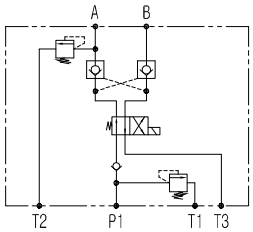	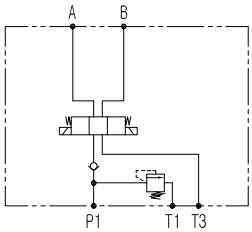
	APPLICABLE VALAE	HIXX1C	YAXX1C, YPXXIC, YOXX1C, YCXX1C

C — RELIEF VALVE PRESSURE RANGE

Code	A	B	C	D	F
Pressure range	10 ~ 60 kg·f/㎠	50 ~ 150 kg·f/㎠	100 ~ 200 kg·f/㎠	150 ~ 250 kg·f/㎠	50 ~ 120 kg·f/㎠ (flow range 12LPM~30LPM)

T SERIES BUILT-IN VALVE

A

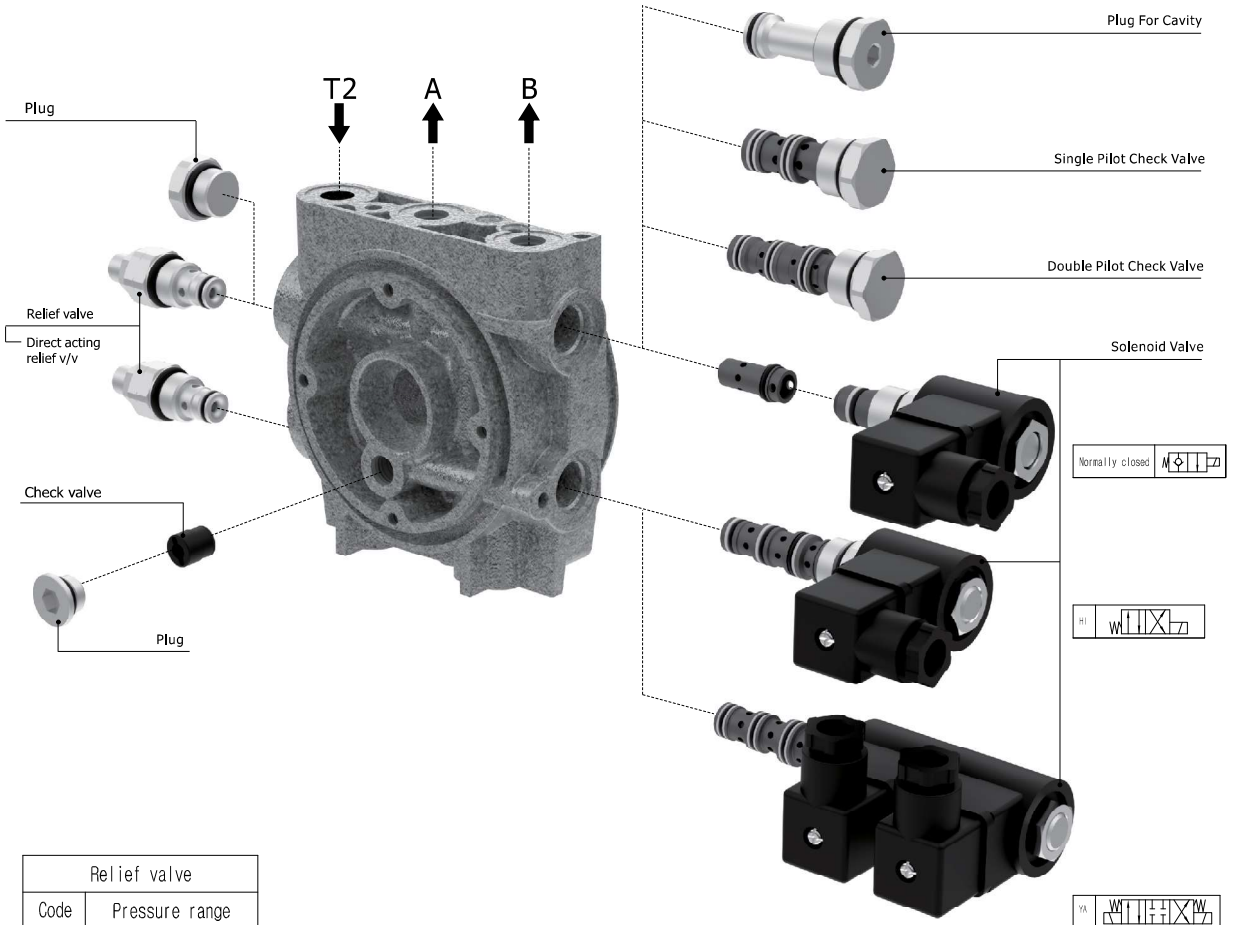

Relief valve	
Code	Pressure range
A	10 ~ 60 kg.f/cm²
B	50 ~ 150 kg.f/cm²
C	100 ~ 200 kg.f/cm²

DIMENSION

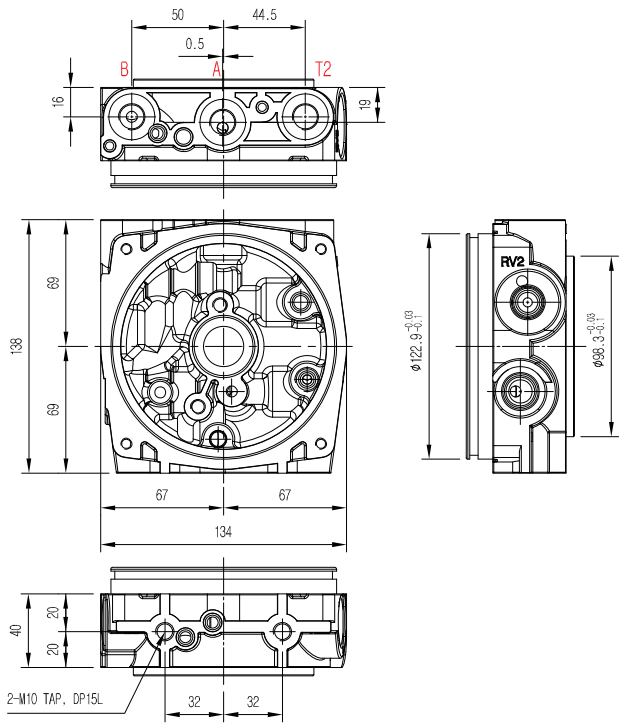

TA Center block

T CENTER BLOCK SPECIFICATION

DESCRIPTION	MAIN SPECIFICATION
1. Made of Aluminum material 2. Outlet port : SAE #6_UNF 9/16" (Options : PF1/4", PT1/4") 3. Pressure adjustable Relief valve 4. Applicable pump displacement : 1.1cc/rev ~ 9.8 cc/rev 5. Only "X" series oil tank applicable (refer to page 93 for X series oil tank)	a : Check valve = PF 1/4" (HC14-2 Cavity) b : Relief valve = UNF 3/4" (HC08-2 Cavity) c : Solenoid valve = UNF 3/4" (HC08-2 or HC08-4 Cavity) d : Pilot check valve = UNF 3/4" (HC08-4 Cavity) e : Orifice = (HC08-2F Cavity) Port A, B, T2 : Primary Work Port = SAE #6_UNF 9/16"

A

TA1

VALVE ASSEMBLY

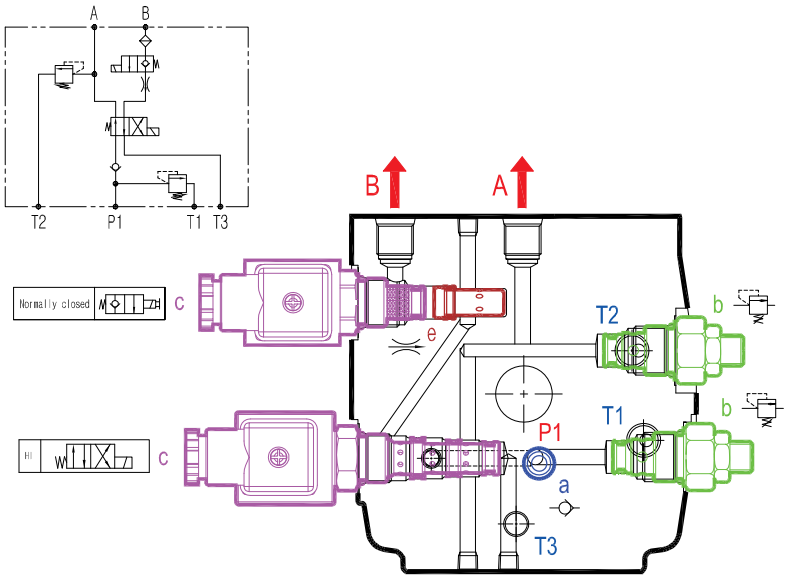

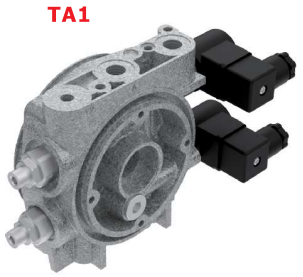

VALVE ASSEMBLY

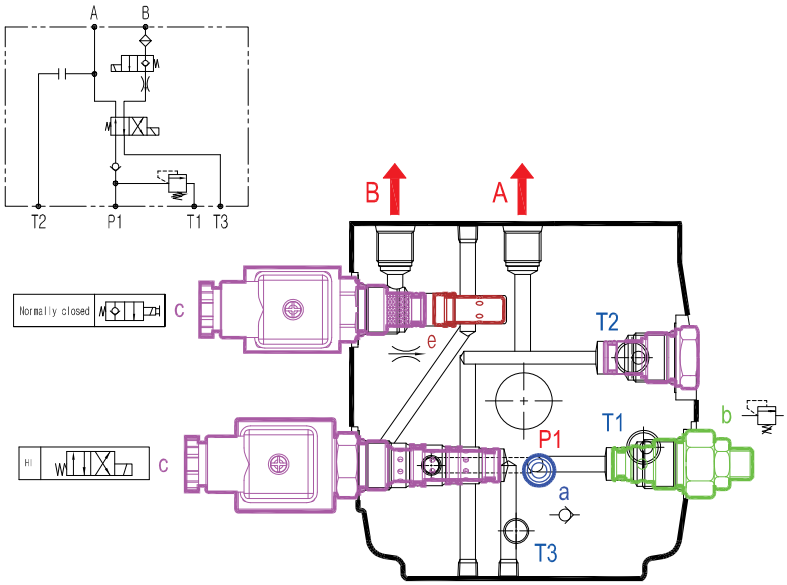

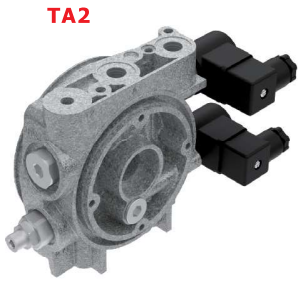

A

TA3

VALVE ASSEMBLY

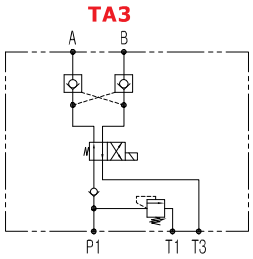

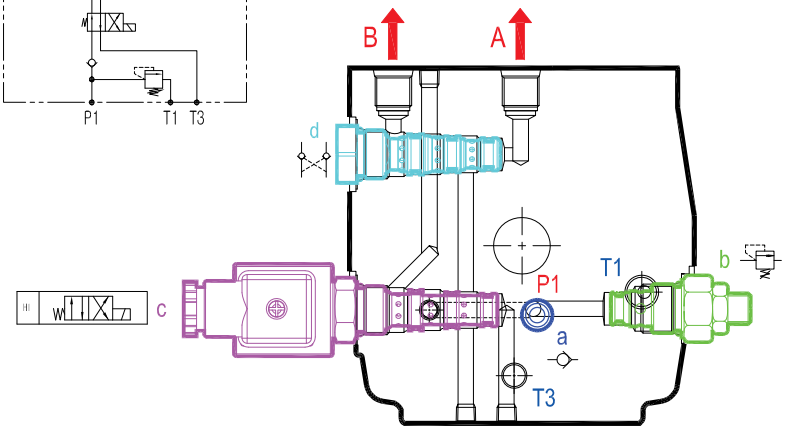

TA4

VALVE ASSEMBLY

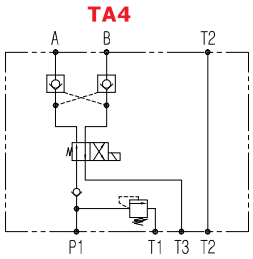

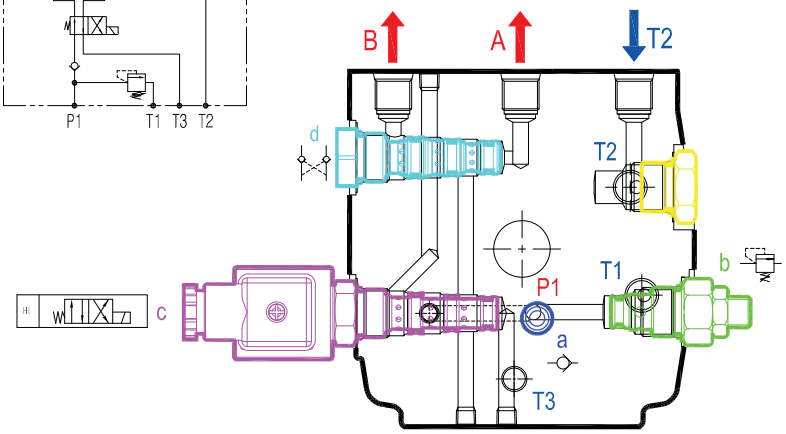

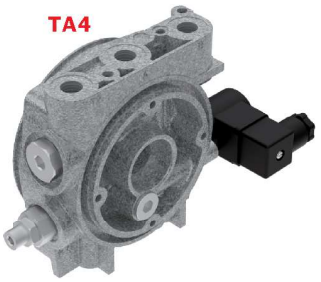

TA5

VALVE ASSEMBLY

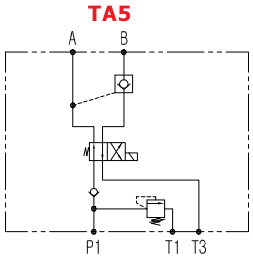

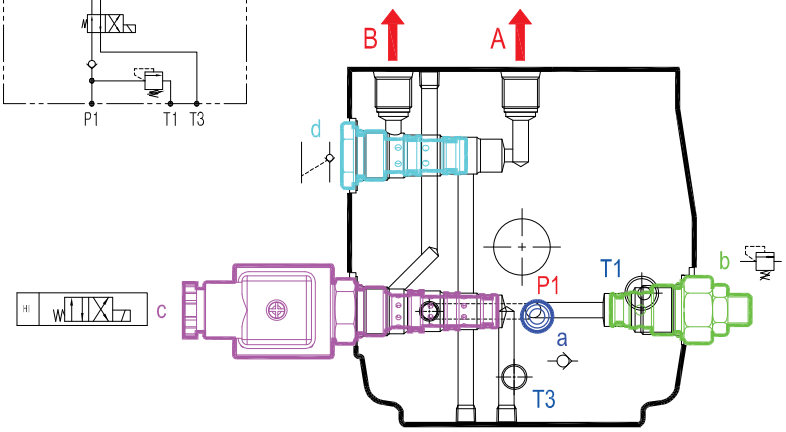

A

TA6

VALVE ASSEMBLY

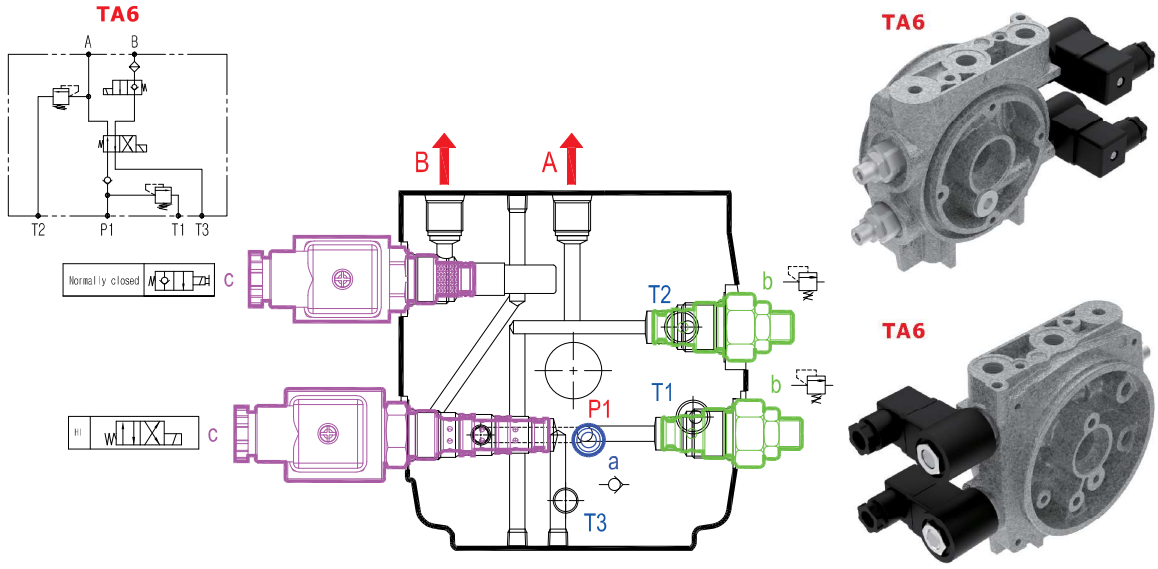

TA7

VALVE ASSEMBLY

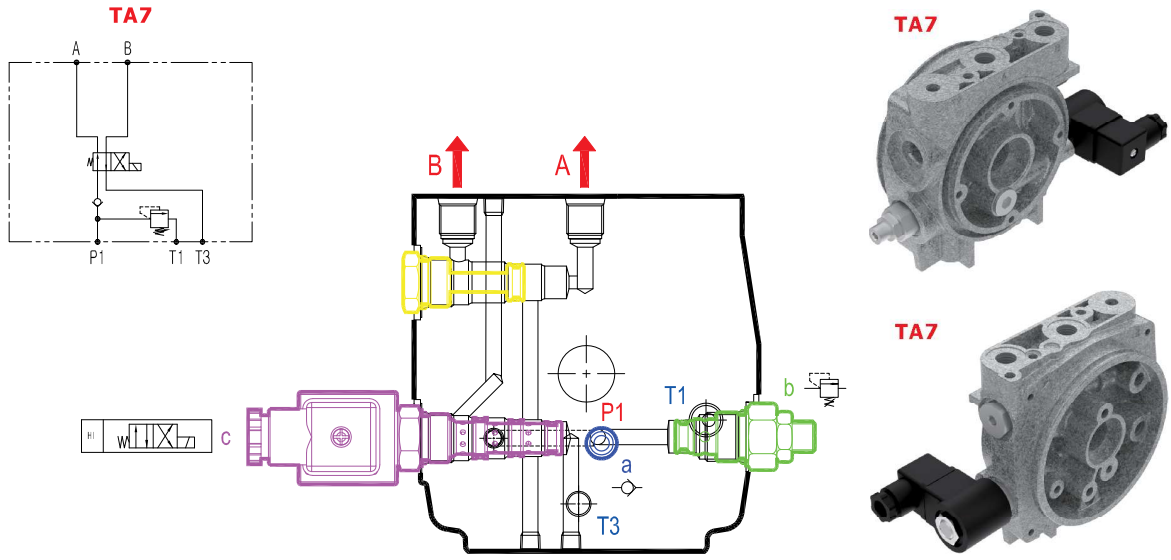

TA8

VALVE ASSEMBLY

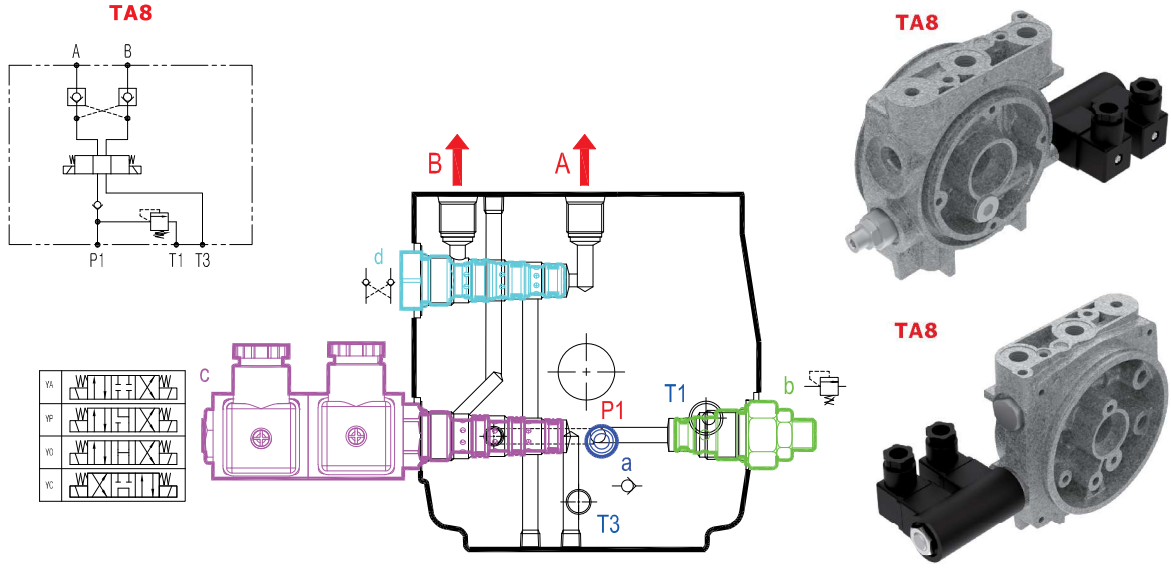

A

TA9

VALVE ASSEMBLY

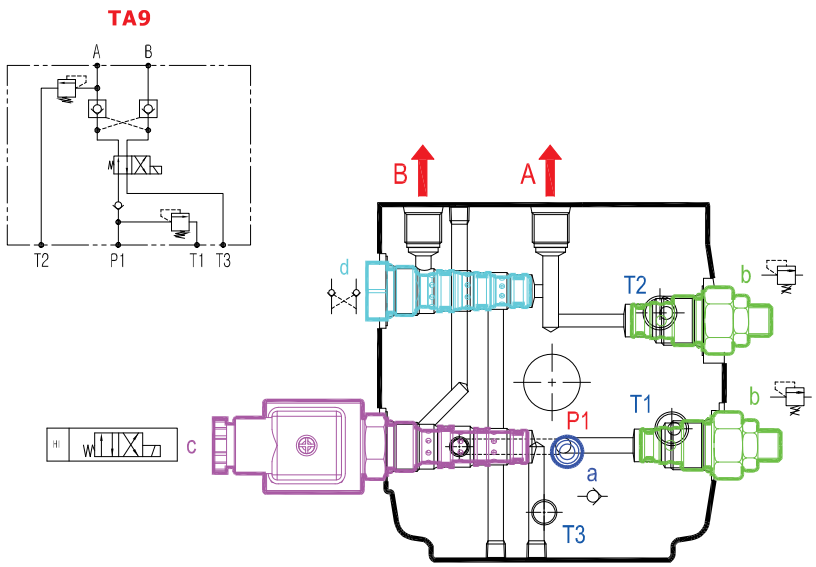

TA0

VALVE ASSEMBLY

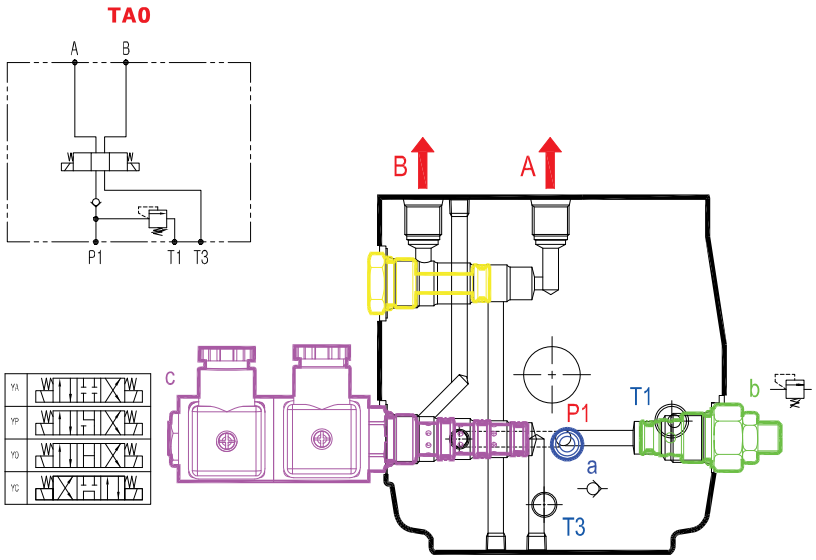

APPLICABLE VALVE DIAGRAM

DIAGRAM

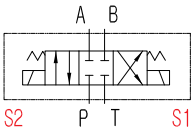

YAXX1C

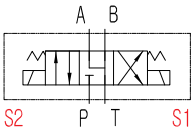

YPXX1C

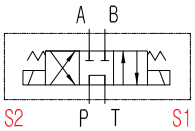

YCXX1C

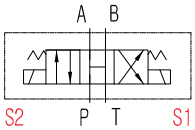

YOXX1C

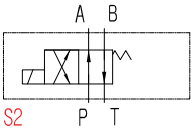

HIXX1C

PUMP

TECHNICAL DATA

GO One group - Gear pump

ITEM CODE	C	PRESSURE (kg·f/㎠)			FLOW (ℓ/min)		SPEED (rpm)		A
	DISPLACEMENT (cc/rev)	P1	P2	P3	DC @2500 rpm	AC @1700 rpm	MAX	MIN	
GO08	0.8	230	250	270	2.0	1.3	6000	1000	73.5
GO11	1.1				2.7	1.8			74
GO13	1.3				3.2	2.2			75
GO16	1.6				4.0	2.7			76
GO21	2.1				5.2	3.5			78
GO23	2.3				5.7	3.9			79
GO27	2.7				6.7	4.6		800	80
GO32	3.2	210	230	250	8.0	5.4	5000		82
GO37	3.7				9.2	6.2	4500		84
GO42	4.2				10.5	7.1	4000		86
GO48	4.8	190	210	230	12.0	8.1	3500	600	88
GO58	5.8				14.5	9.8	3000		92
GO70	7.0	160	180	200	17.5	11.9	2500		96
GO80	8.0	120	140	160	20.0	13.6	2100		100
	9.8				24.5	16.6	2000		106.5

DIMENSION

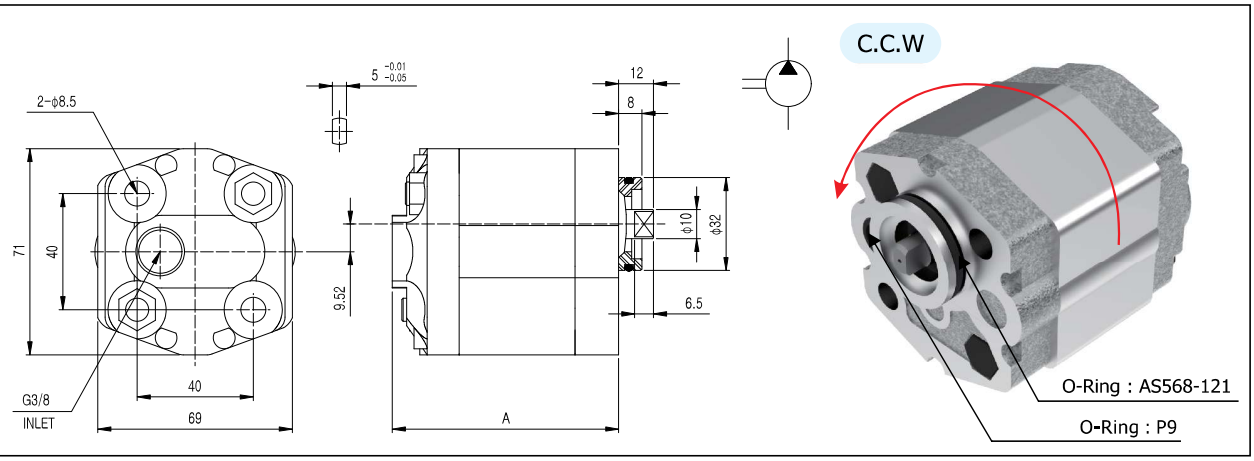

Note.
1. Please contact Hydro-Tek for Group 2, Group 3 pump
2. Please contact Hydro-Tek for tandem pump
3. Please contact Hydro-Tek for high pressure pump

PRESSURE DEFINITION

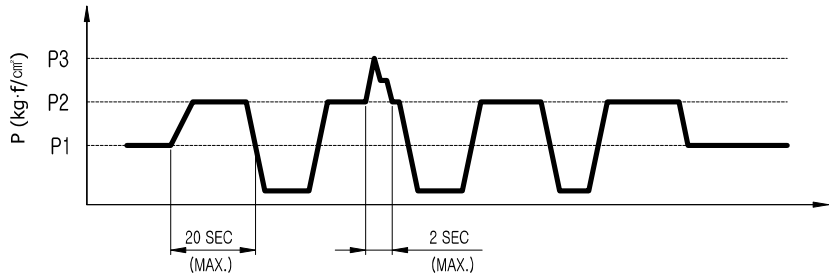

P3= Peak Max. Pressure
P2 = Intermittent Max. Pressure
P1 = Continuous Max. Pressure

TECHNICAL DATA

GH Half group - Gear pump

ITEM CODE	C	PRESSURE (kg·f/㎠)			FLOW (ℓ/min)		SPEED (rpm)		A
	DISPLACEMENT (cc/rev)	P1	P2	P3	DC @2500 rpm	AC @1700 rpm	MAX.	MIN.	
GH02	0.2	200	230	250	0.5	0.3	7000	1000	58
GH03	0.3				0.7	0.5			60
GH05	0.5				1.2	0.8			61
GH07	0.7				1.7	1.1			64
GH11	1.1				2.7	1.8			68
GH16	1.6				4.0	2.7			71

DIMENSION

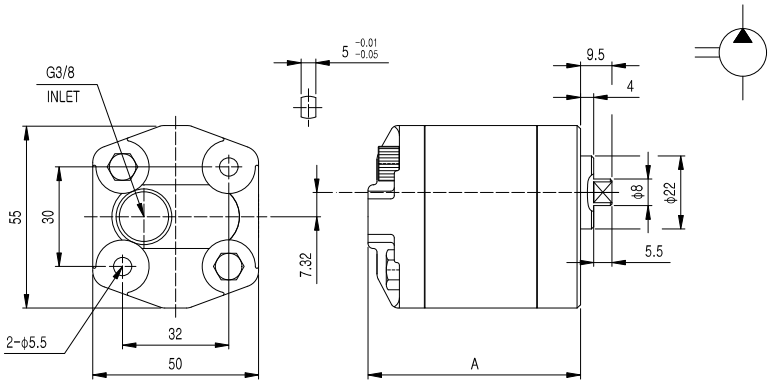

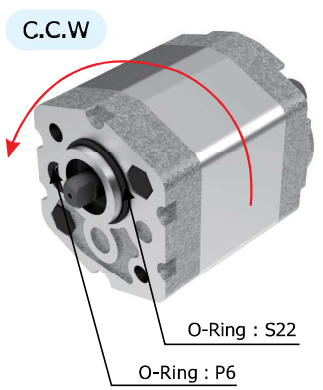

TECHNICAL DATA

DH Bi-directional-gear pump (for Double acting cneter block)

ITEM CODE	C	PRESSURE (kg·f/㎠)			FLOW (ℓ/min)@2500rpm	SPEED (rpm)		A
	DISPLACEMENT (cc/rev)	P1	P2	P3		MAX.	MIN.	
DH02	0.2	180	210	230	0.48	6000	1000	68
DH03	0.3				0.92			69.5
DH05	0.5				1.25			70.5
DH07	0.7				1.87			72.5
DH11	1.1				2.5			74.5

DIMENSION

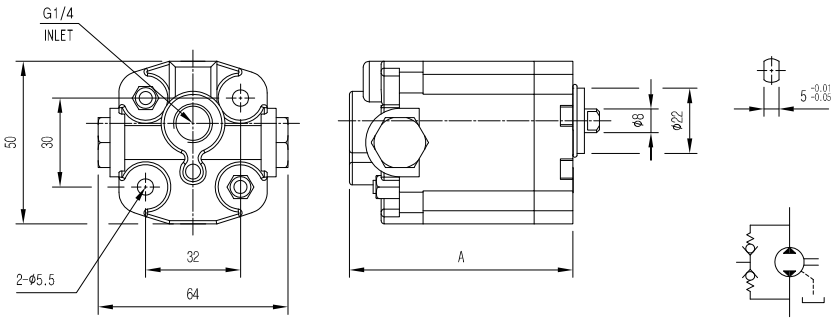

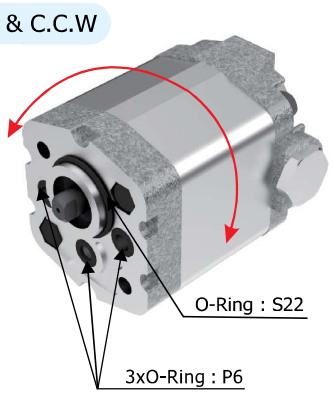

3 P H 0 2 X
A / B / C Brand

PISTON PUMP

TECHNICAL DATA

PH Bi-directional-piston pump

ITEM CODE	DISPLACEMENT (cc/rev)	PRESSURE (kg·f/㎠)			FLOW (ℓ/min)@2800rpm	SPEED (rpm)		A
		P1	P2	P3		MAX.	MIN.	
PH02	0.2	200	230	250	0.24	7000	1000	64
PH03	0.3				0.32			
PH04	0.4				0.52			

DIMENSION

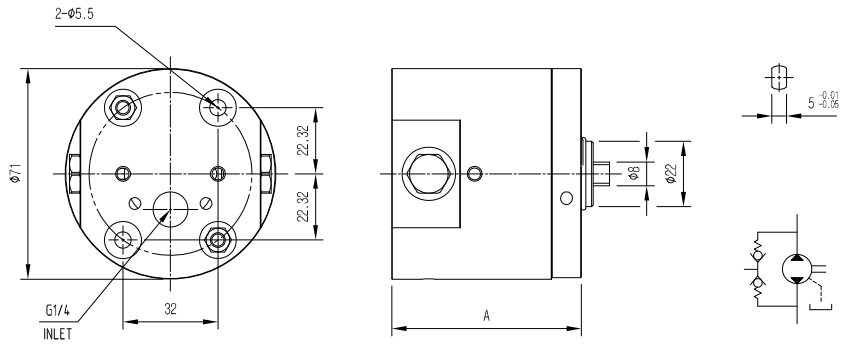

C.W & C.C.W

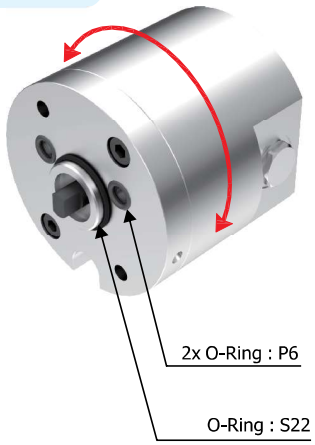

MOUNTING

	Mounting position			
A	**H**		**V**	
	Horizontal type		Vertical type	
	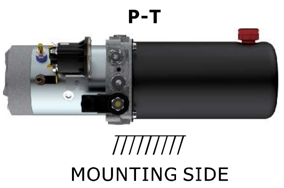	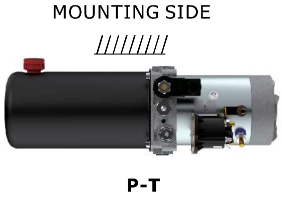		

	Air breather position				
B	**P**	**C**	**M**	**F**	**S**
	P-T port	Cartridge cavity	Base mounting	Flank mounting	Special
		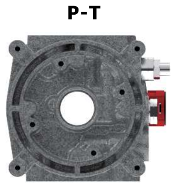	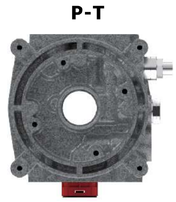		**Special mounting**

	Terminal box (AC) or Start relay (DC) position				
C	**P**	**C**	**M**	**F**	**S**
	P-T port	Cartridge cavity	Base mounting	Flank mounting	Special
		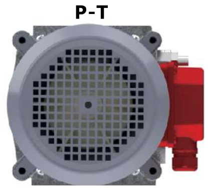		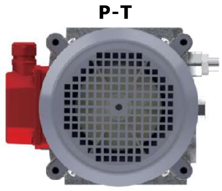	**Special mounting**
		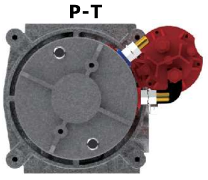	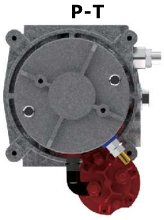	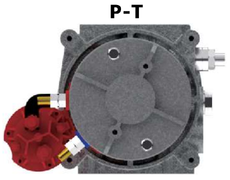	

	Mounting bracket	
D	**B**	**X**
	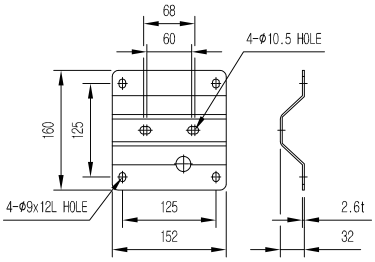  	Without mounting bracket ***Note.*** This mounting bracket is only for X and J series center block.

Note. Hydro-tek has another bracket (CODE : H, Height : 45mm) Please refer to page NO.94

PLASTIC OIL TANK-P

Plastic oil tank for **'X & D & T'** - series center block & **S**quare type

ITEM CODE	CAPACITY (ℓ)		
	TANK	USABLE 80%	USABLE 70%
PXS02	2	1.5	1.3
PXS03	3	2.3	2.0

V = Vertical mounting

H = Horizontal mounting

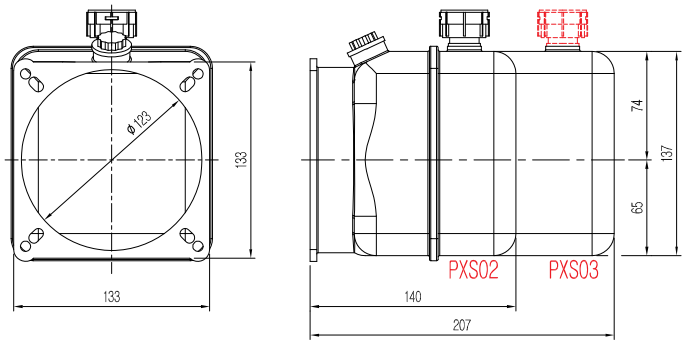

Note. Air breather : PF3/8"

ITEM CODE	CAPACITY (ℓ)		
	TANK	USABLE 80%	USABLE 70%
PXS04	4	3.6	3.1
PXS05	5	5.4	4.7
PXS08	8	8.4	7.4
PXS10	10	10.2	9.0
PXS12	12	10.6	9.4

Note. Air breather : PF3/4"

V = Vertical mounting

H = Horizontal mounting

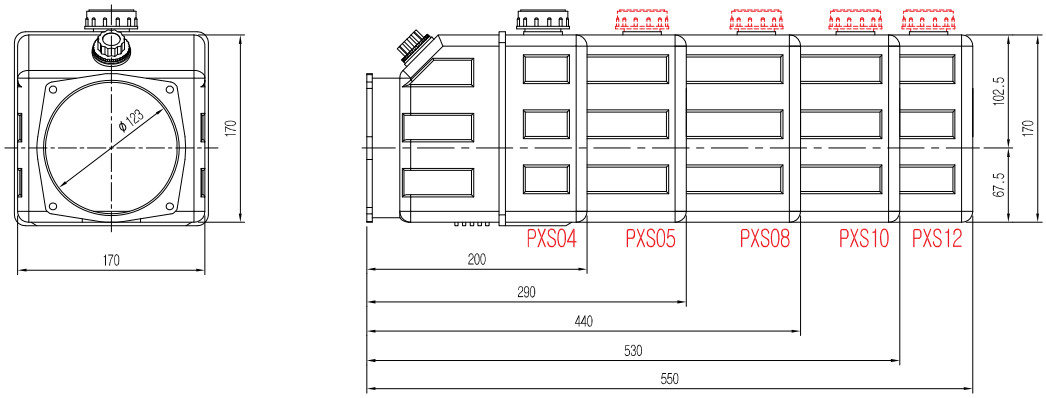

Note. This plastic oil tank is only for 'X & D & T' center block'

PLASTIC OIL TANK-P

Plastic oil tank for **C** - series center block & **S**quare type

ITEM CODE	CAPACITY (ℓ)		
	TANK	USABLE 80%	USABLE 70%
PCS04	4	3.6	3.1
PCS05	5	5.4	4.7
PCS08	8	8.4	7.4
PCS10	10	10.2	9.0
PXS12	12	10.6	9.3

V = Vertical mounting

H = Horizontal mounting

Note. Air breather : PF3/4"

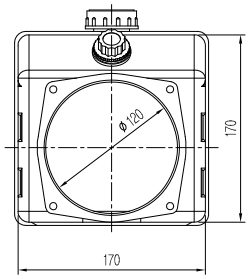

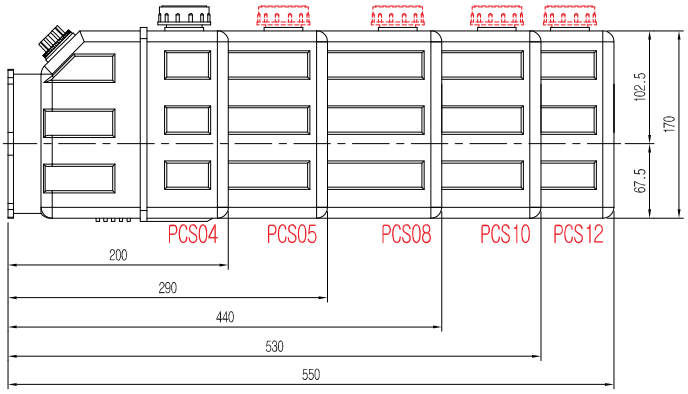

Note. This plastic oil tank is only for ' C center block'

ITEM CODE	CAPACITY (ℓ)		
	TANK	USABLE 80%	USABLE 70%
PL04	4	2.9	2.5

Note. Air breather : PF1/2"

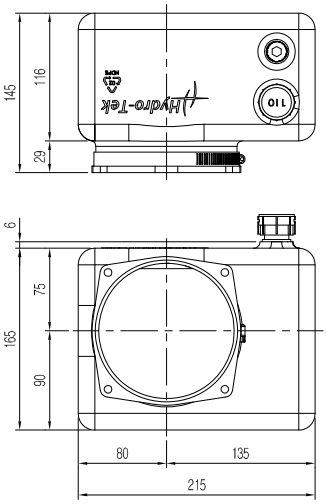

ITEM CODE	CAPACITY (ℓ)		
	TANK	USABLE 80%	USABLE 70%
PL06	6	3.9	3.4

Note. Air breather : PF1/2"

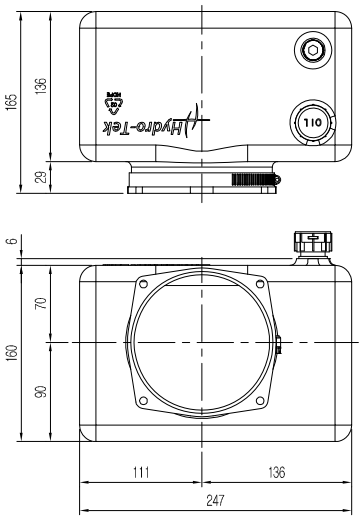

Note. This plastic oil tank is only for ' X center block'

5 X R 0 1
A / B / C

STEEL OIL TANK-X/D

ITEM CODE	CAPACITY (ℓ)	
	TANK	USABLE
XXX	Without Tank	
XSLE	Only Sleeve	

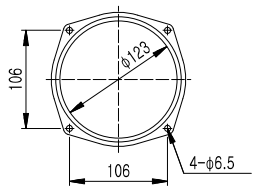

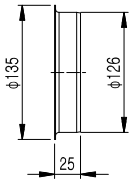

Steel oil tank for 'X & D & T' series center block & Round type

ITEM CODE	CAPACITY (ℓ)		
	TANK	USABLE	
		Horizontal Mounting	Vertical Mounting
XR01	1	0.9	0.9
XR02	2	1.7	1.9
XR03	3	2.2	2.3

V = Vertical mounting

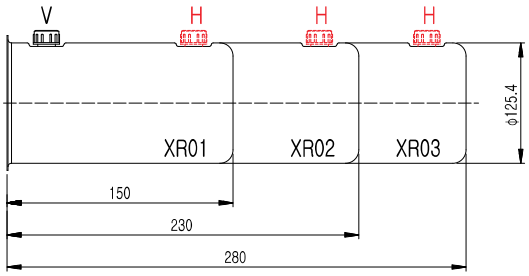

H = Horizontal mounting

ITEM CODE	CAPACITY (ℓ)			
	TANK	USABLE		
		Horizontal Mounting	Vertical Mounting	
			V-type	D-type
XR04	4	3	2.1	2.7
XR05	5	4	3.6	4.2
XR06	6	5	5.0	5.5
XR08	8	6	6.3	6.8

V-type

D-type

V = Vertical mounting

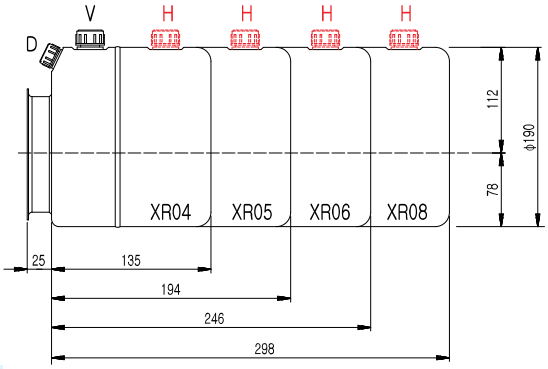

H = Horizontal mounting

H-type

ITEM CODE	CAPACITY (ℓ)		
	TANK	USABLE	
		Horizontal Mounting	Vertical Mounting
XR11	11	9.5	10.3

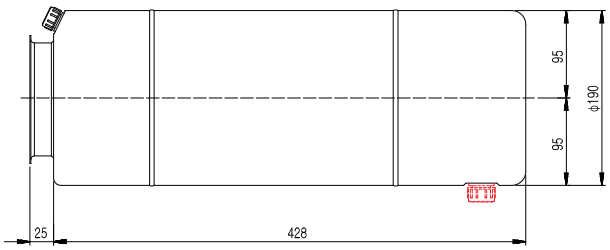

V = Vertical mounting

H = Horizontal mounting

Note. XR11 can be used for both horizontal and vertical mounting.

Mounting bracket

H

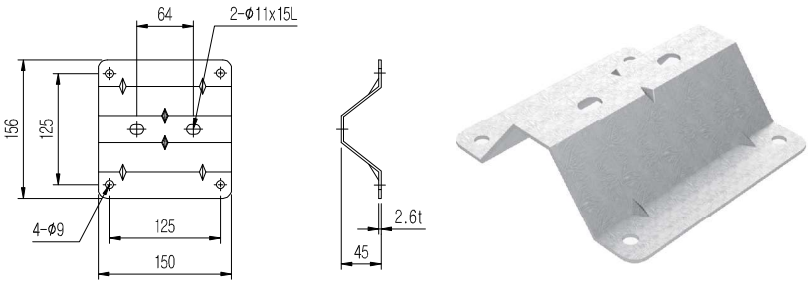

Note.

This mounting bracket is Mainly for **'XR11'** Tank.

Steel oil tank for **'X & D & T'** series center block & **S**quare type

ITEM CODE	CAPACITY (ℓ)	
	TANK	USABLE
XS04	4	2.8

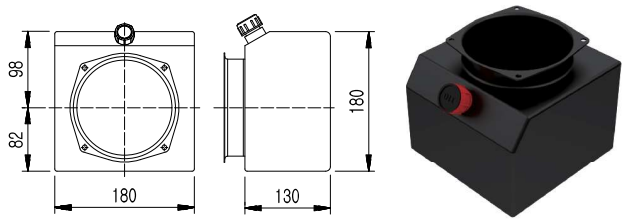

ITEM CODE	CAPACITY (ℓ)	
	TANK	USABLE
XS05	5	4.3

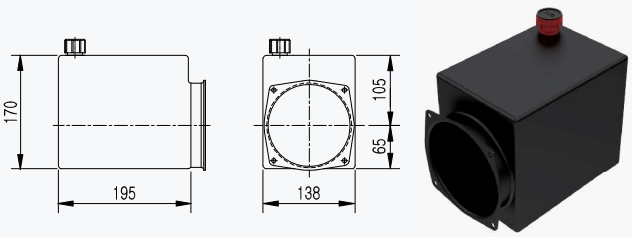

ITEM CODE	CAPACITY (ℓ)	
	TANK	USABLE
XS09	9	6.9

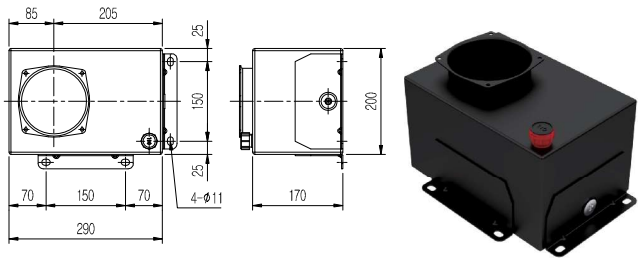

ITEM CODE	CAPACITY (ℓ)	
	TANK	USABLE
XS20	20	16

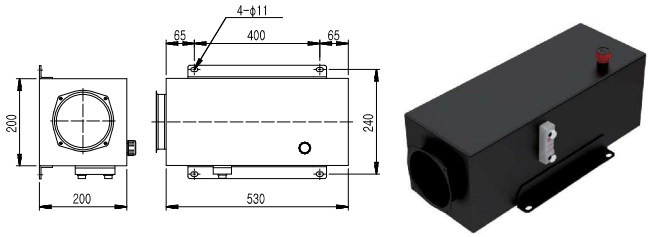

ITEM CODE	CAPACITY (ℓ)	
	TANK	USABLE
XS12	12	9.1
XS15	15	12.2

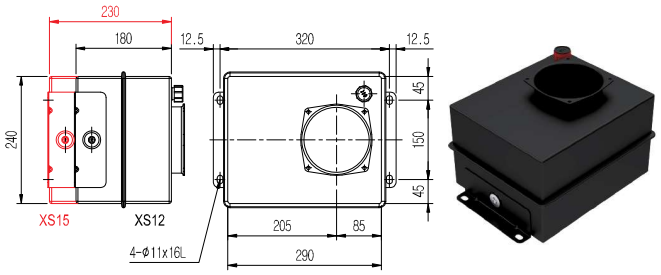

ITEM CODE	CAPACITY (ℓ)	
	TANK	USABLE
XS50	50	50

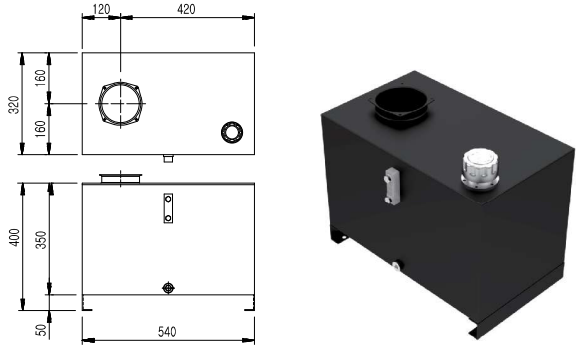

ITEM CODE	CAPACITY (ℓ)	
	TANK	USABLE
XS25	25	19.7
XS30	30	22.8

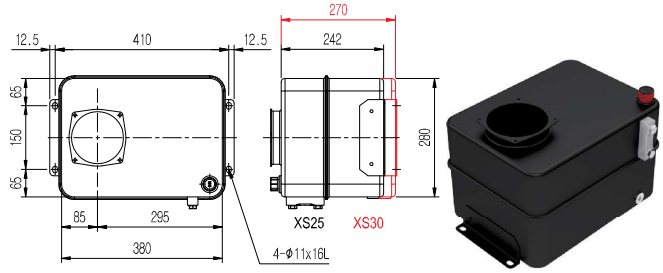

OIL GAUGE

PF 3/8"

C38

PF 1/2"

C12

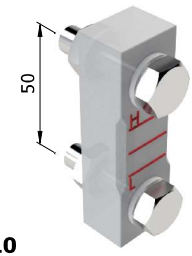

2-M10

C50

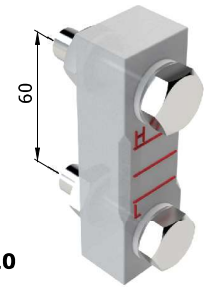

2-M10

C60

5 | Q | R | 1 | 0
A / B / C

STEEL OIL TANK-Q

ITEM CODE	CAPACITY (ℓ)	
	TANK	USABLE
XXXX	Without Sleeve	
QSLE	Only Sleeve	

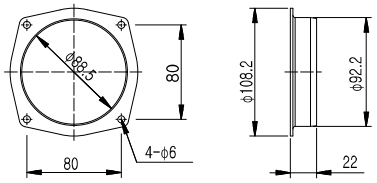

Steel oil tank for 'Q' series center block & Round type

ITEM CODE	CAPACITY (ℓ)	
	TANK	USABLE
QR10	1	0.7
QR15	1.5	1.2
QR20	2	1.7
QR30	3	2.3

V = Vertical mounting

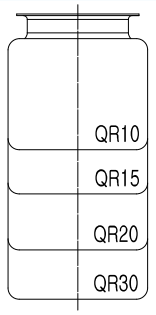

H = Horizontal mounting

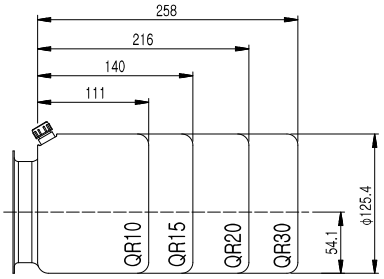

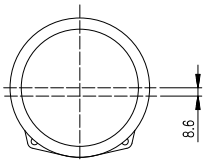

Steel oil tank for 'Q' series center block & Square type

ITEM CODE	CAPACITY (ℓ)	
	TANK	USABLE
QS20	2	1.4
QS30	3	2.4

V = Vertical mounting

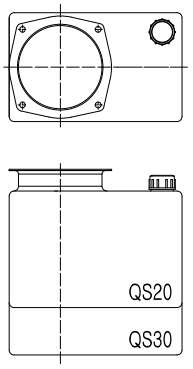

H = Horizontal mounting

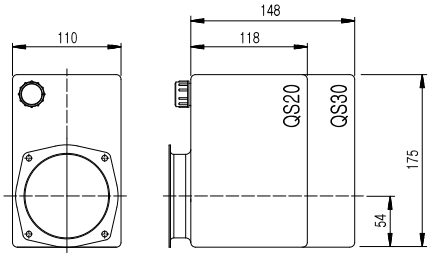

SUCTION FILTER

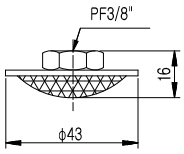

SF1

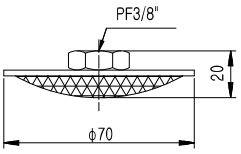

SF2

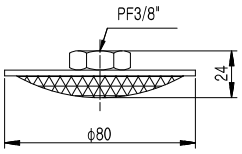

SF3

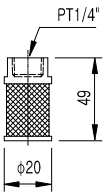

SF4

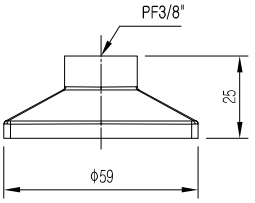

SF2 (Square)

Note. Filtration 100 Mesh (Please contact Hydro-Tek for 200 Mesh)

5 S S 1 0
A / B / C

STEEL OIL TANK-S

ITEM CODE	CAPACITY (ℓ)	
	TANK	USABLE
XXXX	Without Sleeve	
SSLE	Only Sleeve	

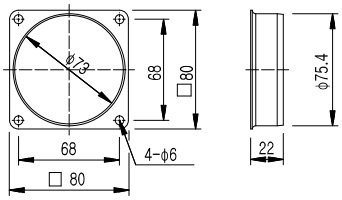

Steel oil tank for 'S' series center block & Round type

ITEM CODE	CAPACITY (ℓ)	
	TANK	USABLE
SR07	0.7	0.8
SR10	1	0.9
SR20	2	2.5

V = Vertical mounting

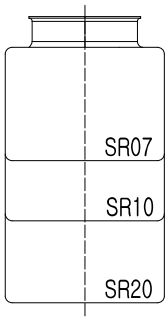

H = Horizontal mounting

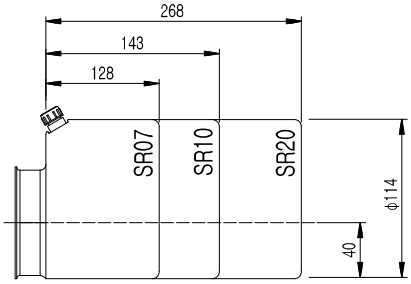

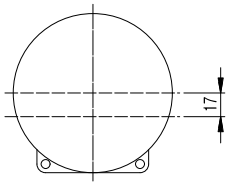

Steel oil tank for 'S' series center block & Square type

ITEM CODE	CAPACITY (ℓ)	
	TANK	USABLE
SS10	1	0.65
SS20	2	0.94

V = Vertical mounting

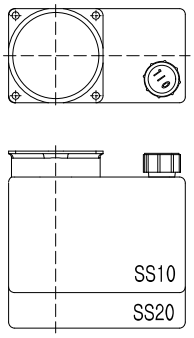

H = Horizontal mounting

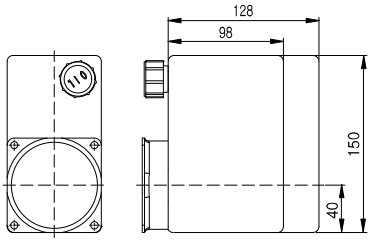

AIR BREATHER

 PF 3/8"	 PF 1/2"	 PF 3/4"	 PF 3/8" Oil check type	 PF 1/2" Oil check type	 PF 3/4" Oil check type
AW04	AW05	AW06			
 PF 3/8"	 PF 1/2"	 PF 3/4"			
AB04	AB05	AB06	AB14	AB15	AB16

6	S	C	2	8	*	L	/	N
	A	B	C	D		E		No emergency

SOLENOID VALVE & COIL

A	ITEM CODE	S	MHXX	NNNN
	TYPE	Solenoid valve	Micro s/w manual	Plug for cavity

B	ITEM CODE	C	O	D
	DIAGRAM	Normally closed type	Normally open type	Double locking type

C	ITEM CODE	1	2	3	4
	VOLTAGE	DC 12V	DC 24V	AC 110V	AC 220V

D	ITEM CODE	Specification					
		Cavity	Working pressure (Max.)	Flow (Max.)	Internal leakage	Thread	Diameter
	8	08	255 kg · f/㎠	23 ℓ/min	0.15 cc/min	UNF 3/4	Φ12.7

E	ITEM CODE	*N	*NW	*S	*L	*R
	TYPE	DIN Connector	DIN Connector Wiring	Dual Spades	Lead wire (only DC)	Integral Deutche Connector

Note. 1. Use RAC coil for double lock valve or normally open valves for AC electric power source.
2. RAC is standard of AC coil

SOLENOID VALVE SPECIFICATION

SOLENOID VALVE : NORMALLY CLOSED	Description	Operation	Ratings
MODEL : NC08-2PDM 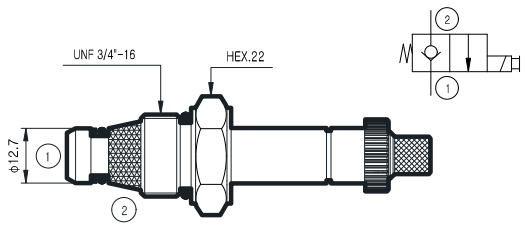	A solenoid -operated, 2-way, normally closed, poppet-type, screw-in hydraulic cartridge valve, intended to act as a blocking or load-holding device for low flow circuits.	When de-energized, the vlave acts as a check valve allowing oil flow only from port ① to port ②. When energized the oil flow is possible from port ② to ① and is restricted from ① to ②. To operate the manual override, turn the round knob counterclockwise; to reseat the valve for normal operation, turn the knob clockwise.	◎ Max Pressure : 255 kg·f/㎠ ◎ Operating Pressure : 207 kg·f/㎠ ◎ Flow : 30l/min max. ◎ Internal Leakage : 0.15cc/min max. at 207 kg·f/㎠ ◎ Filtration : 280 micron or better ◎ Coil must be ordered separately. External valve surface are zinc coated.
MODEL : NC08-2PDN 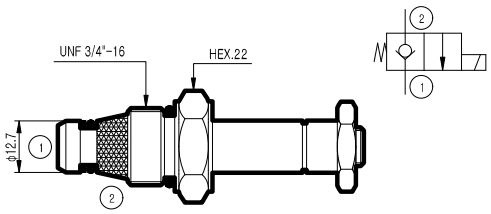	A solenoid -operated, 2-way, normally closed, poppet-type, screw-in hydraulic cartridge valve, intended to act as a blocking or load-holding device for low flow circuits.	when de-energized, the vavle acts as a check valve allowing oil flow only from port ① to port ②. when erergized, the catridge's poppet lifts to open the ② to ① flow path. In this mode, flow from ① to ② is severely restricted.	◎ Max Pressure : 255 kg·f/㎠ ◎ Operating Pressure : 207 kg·f/㎠ ◎ Flow : 30l/min max. ◎ Internal Leakage : 0.15cc/min max. at 207 kg·f/㎠ ◎ Filtration : 280 micron or better ◎ Coil must be ordered separately. External valve surface are zinc coated.

SOLENOID VALVE : NORMALLY OPEN	Description	Operation	Ratings
MODEL : NO08-2PDN 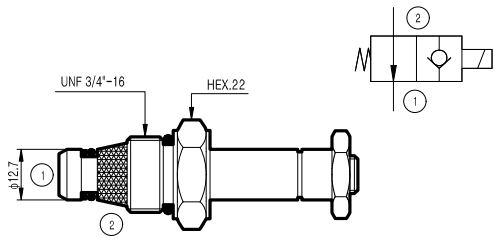 	A solenoid -operated, 2-way, piloted, poppet-type, normally open, screw-in, hydraulic cartridge valve designed for low leakage in load-holding applications.	When de-energized, the valve allows flow from ② to ①. Flow from ① to ② is severely restricted in this mode. When energized, the valve's poppet closes on its seat, blocking flow from ② to ①. In this mode the cartridge will allow ① to ② flow after overcoming the solenoid force (requires 3.4 to 10.3 bar). To operate the manual override, push and hold the override button.	◎ Max Pressure : 255 kg·f/㎠ ◎ Operating Pressure : 207 kg·f/㎠ ◎ Flow : 30l/min max. ◎ Internal Leakage : 0.15cc/min max. at 207 kg·f/㎠ ◎ Filtration : 280 micron or better ◎ Coil must be ordered separately. External valve surface are zinc coated.
MODEL : NO08-2PDP 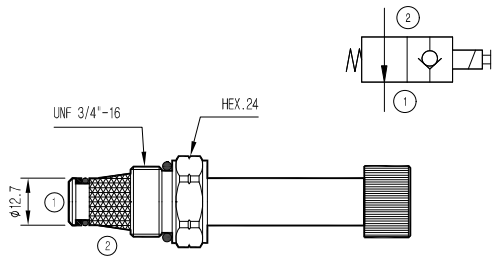 			
MODEL : NO08-2SBN 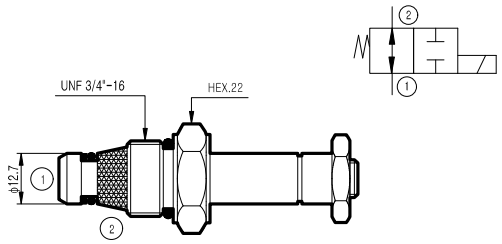 	A solenoid-operated, 2-way, normally open, spool-type, direct-acting, screw-in hydraulic cartridge valve, intended for locking or load-holding in low flow circuits.		◎ Max Pressure : 240 kg·f/㎠ ◎ Operating Pressure : 207 kg·f/㎠ ◎ Flow : 9.51/min max. ◎ Internal Leakage : 82cc/min max. (at 207 kg·f/㎠) ◎ Filtration : 280 micron or better ◎ Coil must be ordered separately. External valve surface are zinc coated.

SOLENOID VALVE : DOUBLE LOCK	Description	Operation	Ratings
MODEL : DL08-2PBP 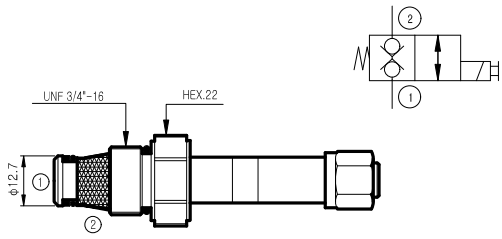 	A solenoid-operated, 2-way, normally closed, poppet-type, bi-directional blocking, direct-acting, screw-in hydraulic cartridge valve for low leakage in load-holding applications.	When de-energized, this valve blocks flow in both directions. When energized the poppet opens to allow flow in both directions. Operation of Manual Override Option: To override, push and hold override button.	◎ Max Pressure : 255 kg·f/㎠ ◎ Operating Pressure : 207 kg·f/㎠ ◎ Flow : 201/min max. ◎ Internal Leakage : 0.25cc/min max. (at 207 kg·f/㎠) ◎ Filtration : 280 micron or better ◎ Coil must be ordered separately. External valve surface are zinc coated.

STANDARD COILS

21W

*N

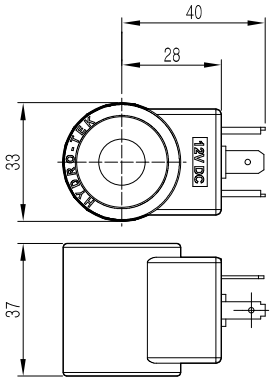

*S

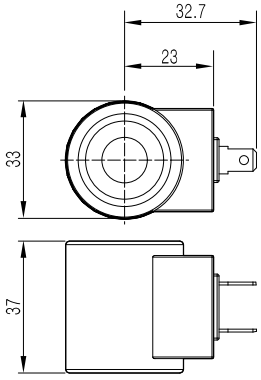

*L

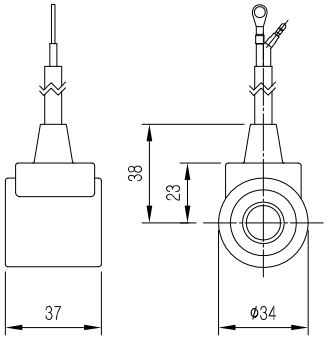

** STANDARD WIRE LENGTH : 650mm

*R

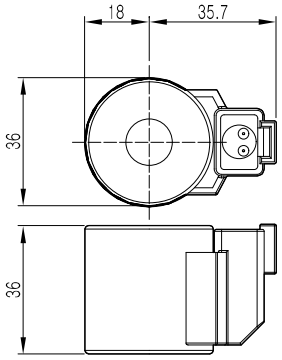

22W

*N

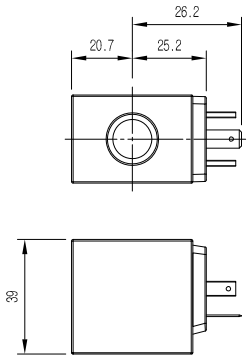

*L

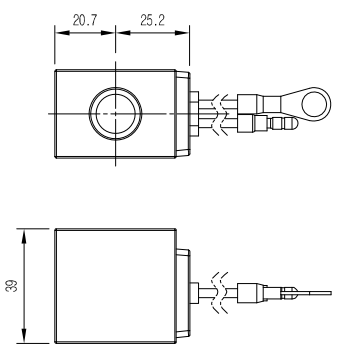

** STANDARD WIRE LENGTH : 290mm

HYDRO-TEK COIL STANDARD TABLE

Voltage		12V DC	24V DC	110V AC ~ 115V AC	220V AC ~ 230V AC
*N	22W	○	○	○	○
	21W	○	○	○	○
*S		○	○		
*L	22W	○	○		
	21W	○	○		
*R		○	○		

ELECTRICAL DIN CONNECTOR

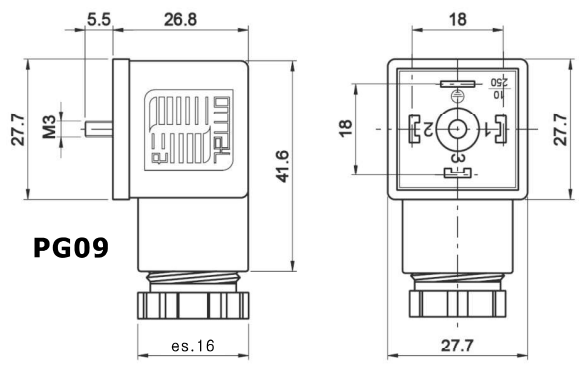

Housing :	Black : PA + 30% GF
Contact holder, Gland nut :	PA + 30% FV / PA + 30% GF
Cable diameter :	8 ~ 10 mm
Contact material :	Cu Zn (Ag)
Max. voltage :	250 V AC / 300 V DC
Max. current :	16A
Operating current :	10A
Spacing :	18mm
Max. wire cross-section :	1.5 ㎟
Insulation class :	C - VDE 0110
Working temperature :	-40℃ / +125℃

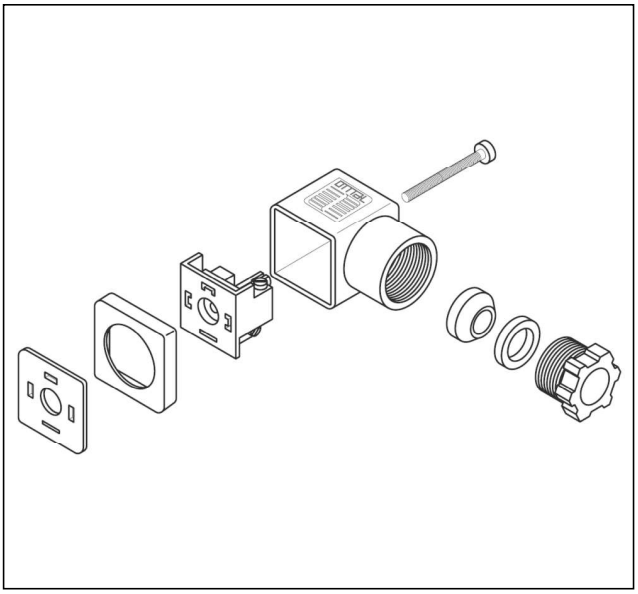

EARTH POSITION

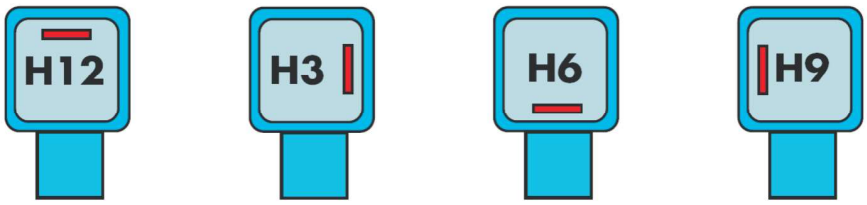

	CABLE DIAMETER
DIN	CABLE GLAND PG09 (9 mm NOMINAL CABLE DIAMETER)
RAC DIN	

7 F 0 6 — PRESSURE COMPENSATED FIXED CONTROL VALVE

A / B

A	ITEM CODE	F	S	G
	APPLICABLE CENTER BLOCK	X - C - QH	SH	D1 - D3

B	ITEM CODE	01	02	03	04	06	08	10	12
	FLOW (ℓ/min)	1	2	3	4	6	8	10	12

Note.
Contact Hydro-Tek for other flow control valves.

DIMENSION

DIAGRAM	F - Series	S - Series	G - Series

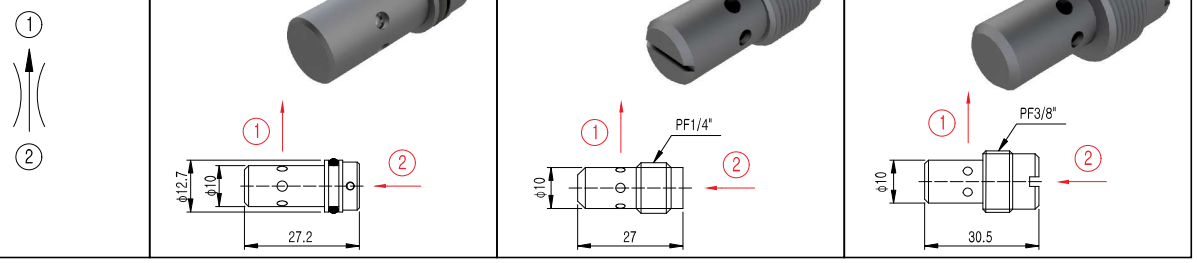

PERFORMANCE CURVE

Flow 1 ~ 4 ℓ/min

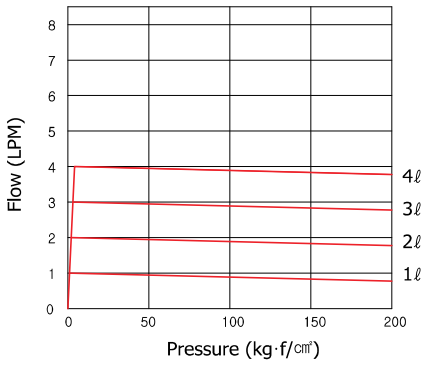

Test Fluid
40℃ (46 cst)

Tolerance : ±10%

Flow 6 ~ 12 ℓ/min

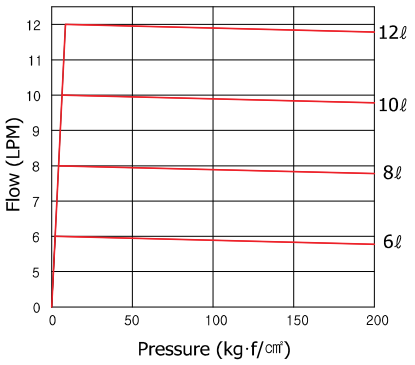

PRESSURE COMPENSATED ADJUSTABLE THROTTLE VALVE

A	ITEM CODE	CAVITY	FLOW RANGE	APPLICABLE CENTER BLOCK
	GA8	08 (φ12.7)	2 ~ 20 (ℓ/min)	X - C - QH - SH

DIMENSION

DIAGRAM

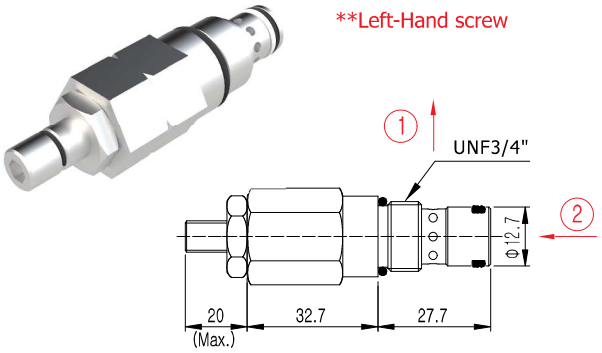

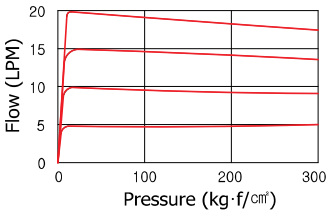

8 | B | Y | 5 | 1 | – | | | |
A / B A / B

DIRECTIONAL SANDWICH BLOCK
(for Double Acting Circuit)

Note. If you need more than 2pcs of different modular blocks, please specify them in next blank
P & T O-Ring : P18 x 2pcs

A	Directional sandwich block **CODE**
B	Directional sandwich block **QUANTITY**

A

BY6

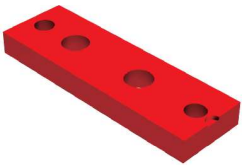

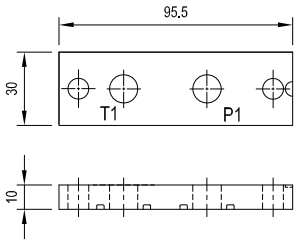

Spacing Block

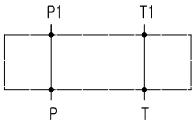

Working pressure (Max.)	Flow (Max.)	Ports size	
		P1	T1
		Φ11.5	Φ11.5

BY5

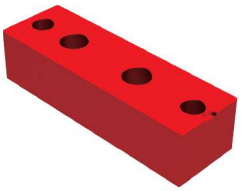

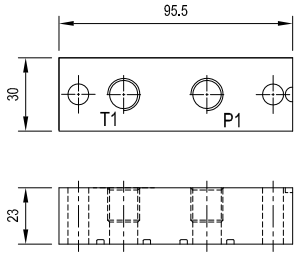

Spacing Block

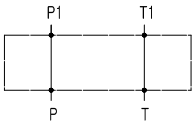

Working pressure (Max.)	Flow (Max.)	Ports size	
		P1	T1
		PF1/4"	PF1/4"

A

BY2

BY3

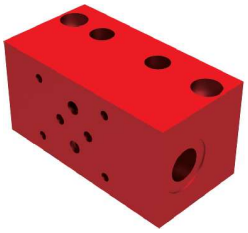

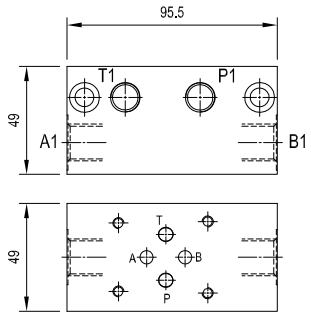

Block for CETOP-3 valve

BY2 : Series circuit
BY3 : Parallel circuit
BH3 : Parallel circuit
- Prevents interference of oil tank and motor.
- Higher than BY3 block.

BY2	BY3 / BH3
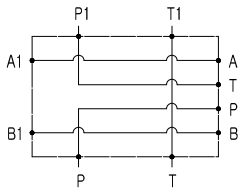	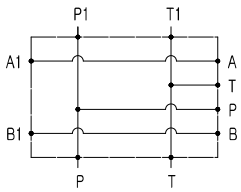

BH3

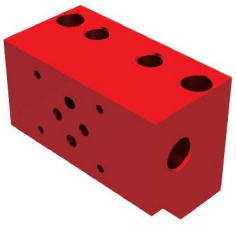

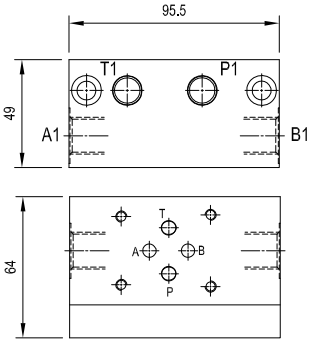

Working pressure (Max.)	Flow (Max.)	Ports size			
		P1	T1	A1	B1
250 kg·f/㎠	40 ℓ/min	PF1/4"	PF1/4"	PF3/8"	PF3/8"

A

BY4

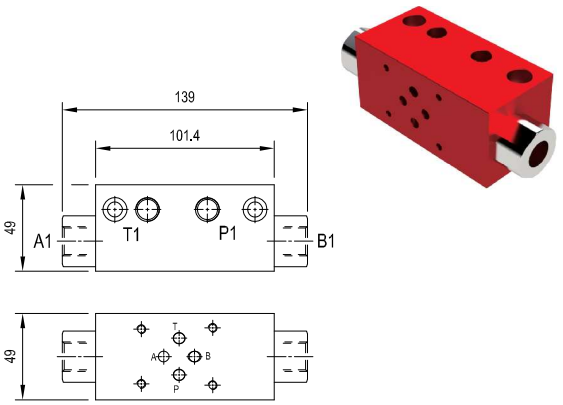

BH4

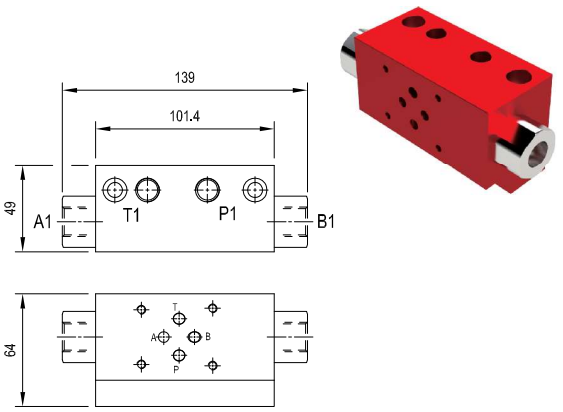

Block with pilot operated check valve
A & B for Cetop-3 valve

BH4 : Prevents interference of oil tank and motor. higher than BY4 block.

BY4 / BH4

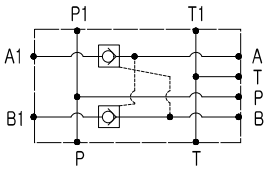

Working pressure (Max.)	Flow (Max.)	Ports size			
		P1	T1	A1	B1
250 kg·f/㎠	40 ℓ/min	PF1/4"	PF1/4"	PT3/8"	PT3/8"

A

BYF

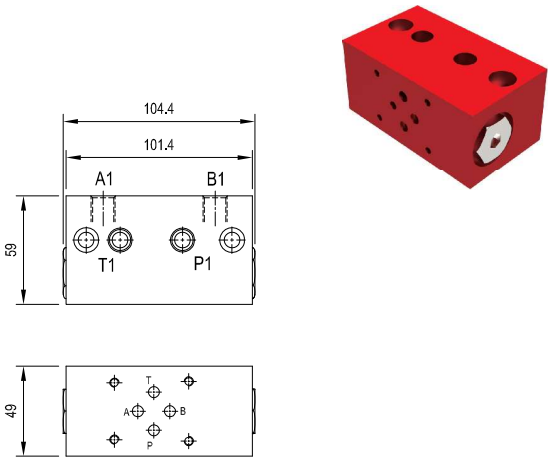

Block with pilot operated check valve
A & B for Cetop-3 valve

BYF

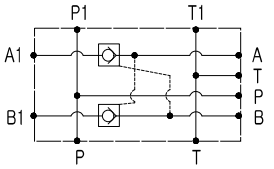

Working pressure (Max.)	Flow (Max.)	Ports size			
		P1	T1	A1	B1
250 kg·f/㎠	40 ℓ/min	PF1/4"	PF1/4"	PF1/4"	PF1/4"

A

BYW

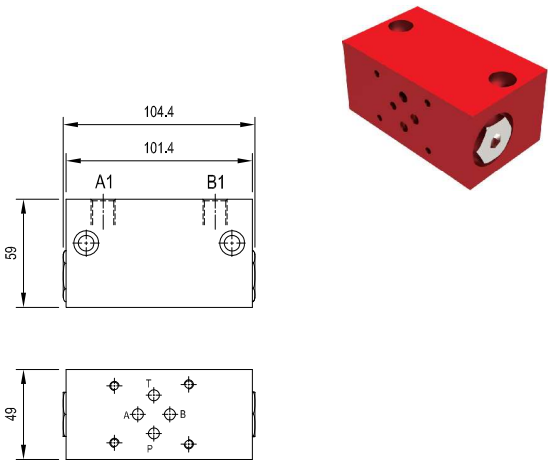

Block with pilot operated check valve
A & B for Cetop-3 valve

BYW

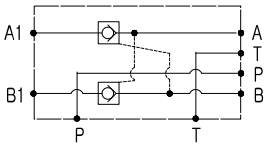

Working pressure (Max.)	Flow (Max.)	Ports size			
		P1	T1	A1	B1
250 kg·f/㎠	40 ℓ/min	–	–	PF1/4"	PF1/4"

DIRECTIONAL SANDWICH BLOCK & DIRECTIONAL VALVE	DIRECTIONAL VALVE	Modular DIN TYPE	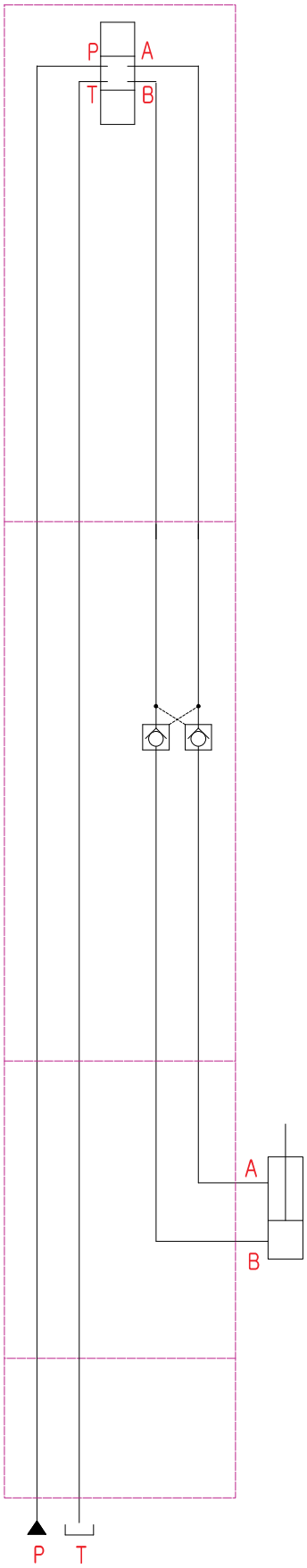	
		Modular BOX TYPE		
		Modular LEAD WIRE TYPE		
	BYW	Block with pilot operated check valve A & B for CETOP-3 valve		
	BYF			
	BH4			
	BY4			
	BH3	Block for CETOP-3 valves		
	BY3			
	BY5	Spacing block		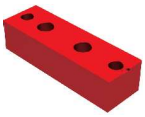
	BY6			

Note. If you need more than 2pcs of different modular blocks, please specify them in next blank

A

Directional valve **ITEM CODE**

YA	YP	YC	YO	YT
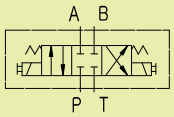	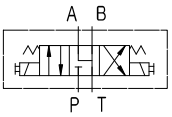	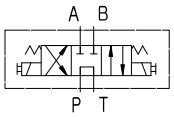	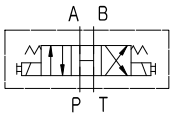	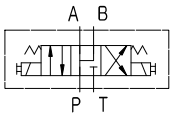

HA	HP	HC	HO	HI
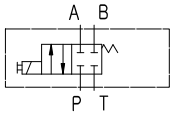	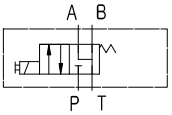	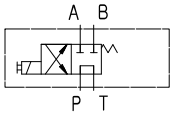	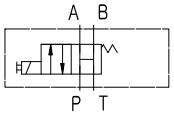	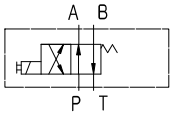

Note. We are stocking 4way-2position valves in small quantities.
Please ask to Hydro-Tek for your volume.

Cartridge directional valve **ITEM CODE**

YA	YP	YC
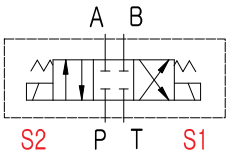	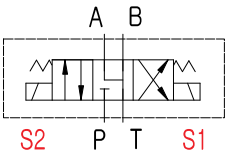	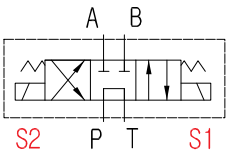

YO	HI
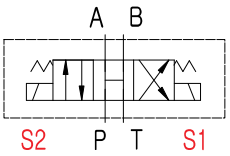	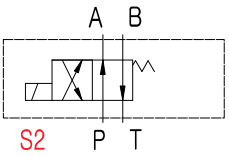

B

ITEM CODE	1	2	3	4
VOLTAGE	DC 12V	DC 24V	AC 110V	AC 220V

C

Directional valve **QUANTITY**

D

ITEM CODE	PORT TYPE	WORKING PRESSURE (Max.)	FLOW (Max.)	TYPE
1	CETOP-3	315 kg·f/㎠	63 ℓ/min	Din type
				Terminal box type
	08-CAVITY	207 kg·f/㎠	11.4 ℓ/min	Cartridge type

	ITEM CODE	TYPE	DIMENSION
E	B	TERMINAL BOX	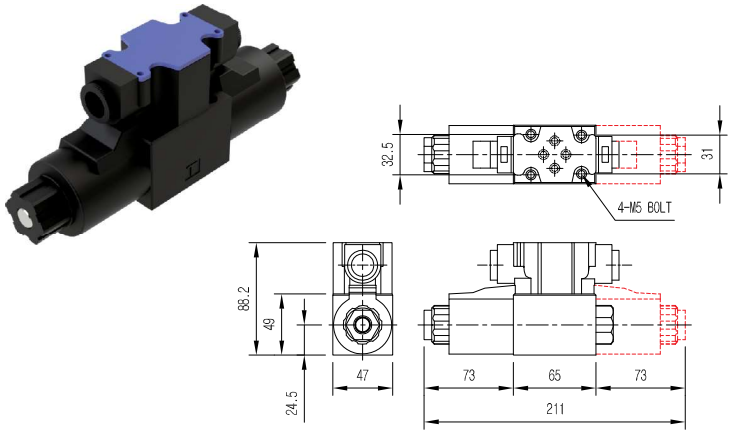
	D	DIN	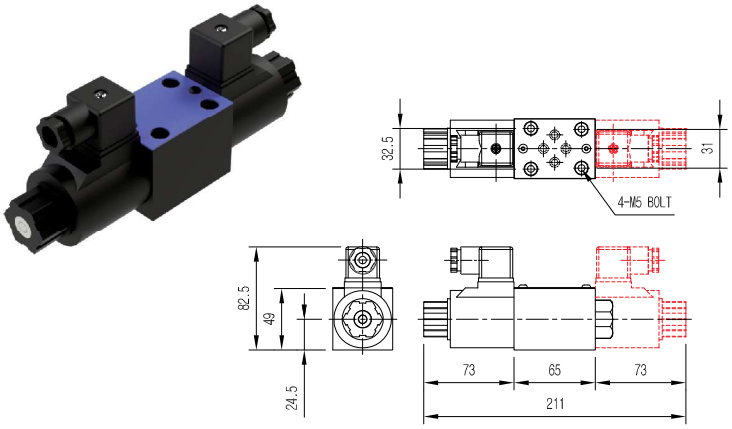
	L	LEAD WIRE	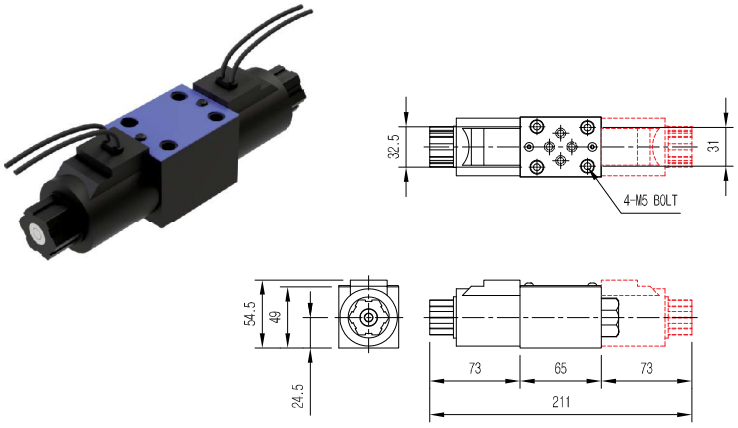
	C	CARTRIDGE	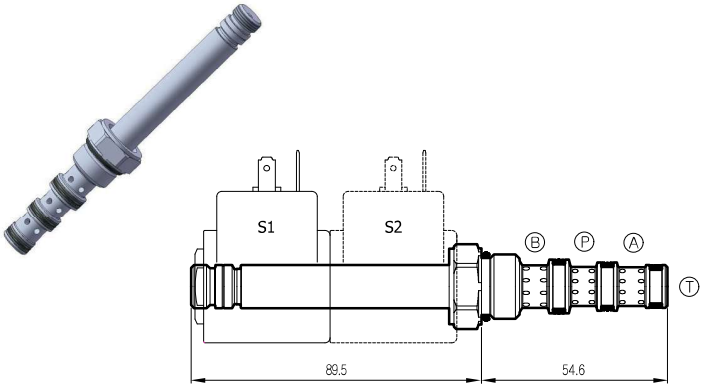

Note. Please contact Hydro-Tek for detent and manual type

10	D	1	1	8	*	N	–					
	A	/ B /	C/		D			A	/ B /	C/		D

SOLENOID SANDWICH VALVE

with cartridge solenoid valve

Note. 1. If you need more than 2pcs of different modular blocks, please specify them in next blank
2. P & T O-Ring : P18 x 2pcs
3. Rac is standard of AC coil

A	Solenoid sandwich valve **CODE**

B	ITEM CODE	1	2	3	4
	VOLTAGE	DC 12V	DC 24V	AC 110V	AC 220V

C	Specification						
	ITEM CODE	Cavity	Working pressure (Max.)	Flow (Max.)	Internal leakage	Thread	Diameter
	8	08	207 kg · f/㎠	25 ℓ/min	0.1 cc/min	UNF 3/4	Φ12.7

D	ITEM CODE	*N	*NW	*S	*L	*R
	Type	DIN Connector	DIN Connector Wiring	Dual Spades	Lead wire	Integral Deutche Connector

A **D1**

Double locking : Push type
Normally closed : Screw type

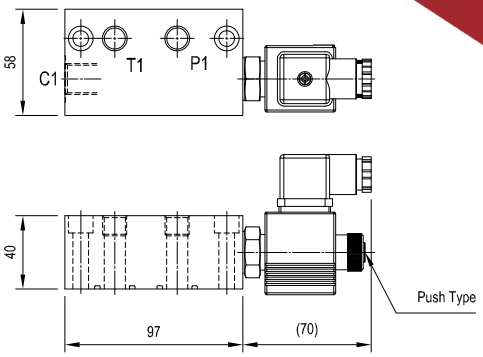

Block for double lock (normally closed)
2way poppet solenoid valve

D1

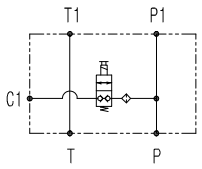

Working pressure (Max.)	flow (Max.)	Ports size		
		P1	T1	C1
250 kg·f/㎠	20 ℓ/min	PF1/4"	PF1/4"	PF3/8"

A **DA**

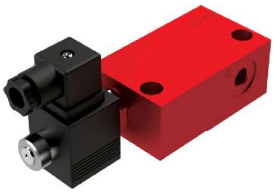

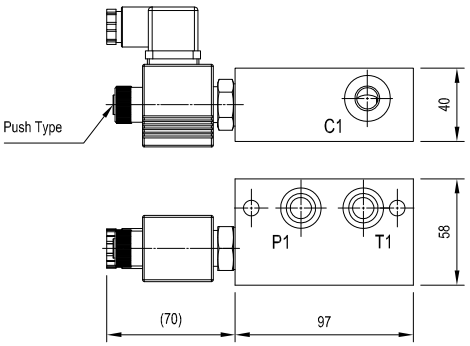

Block for double lock
2way poppet solenoid valve

DA

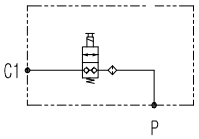

Working pressure (Max.)	flow (Max.)	Ports size		
		P1	T1	C1
250 kg·f/㎠	20 ℓ/min	-	-	PF1/4"

A **DY**

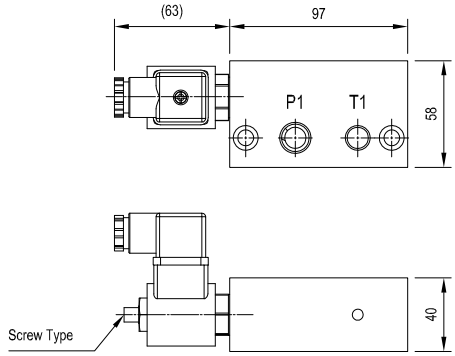

Block for normally closed
2 way poppet solenoid valve

DY

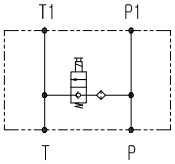

Working pressure (Max.)	flow (Max.)	Ports size		
		P1	T1	C1
250 kg·f/㎠	20 ℓ/min	PF3/8"	PF1/4"	-

A **D2**

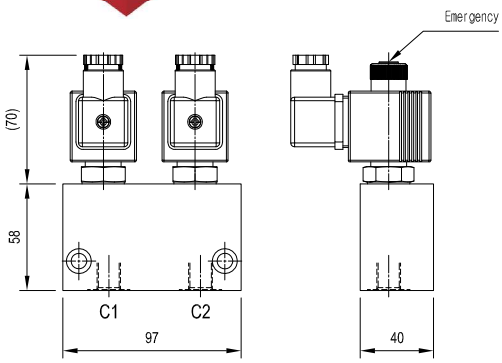

Block for 2 double lock
2way poppet solenoid valve

D2

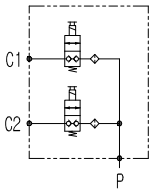

Working pressure (Max.)	flow (Max.)	Ports size	
		C1	C2
250 kg·f/㎠	20 ℓ/min	PF1/4"	PF1/4"

A **D3**

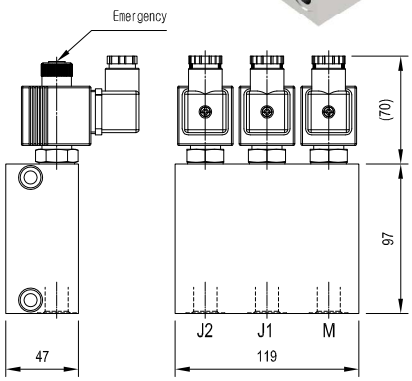

Block foB double lock
2way poppet solenoid valve

D3

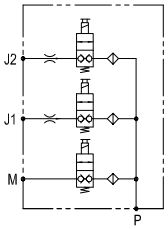

Working pressure (Max.)	flow (Max.)	Ports size		
		M	J1	J2
250 kg·f/㎠	20 ℓ/min	PF3/8"	PF3/8"	PF3/8"

A	SS	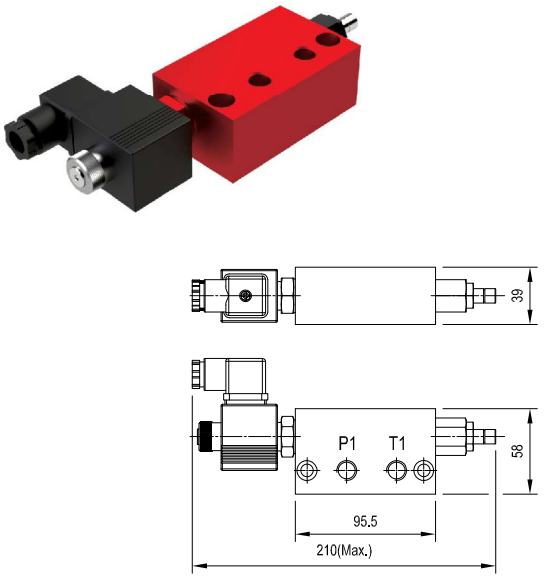	Single acting speed control (CETOP-3) SS 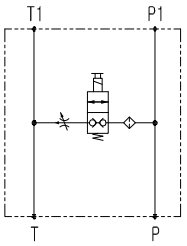

Working pressure (Max.)	flow (Max.)	Ports size	
		P1	T1
250 kg·f/㎠	20 ℓ/min	PF1/4"	PF1/4"

A	DS	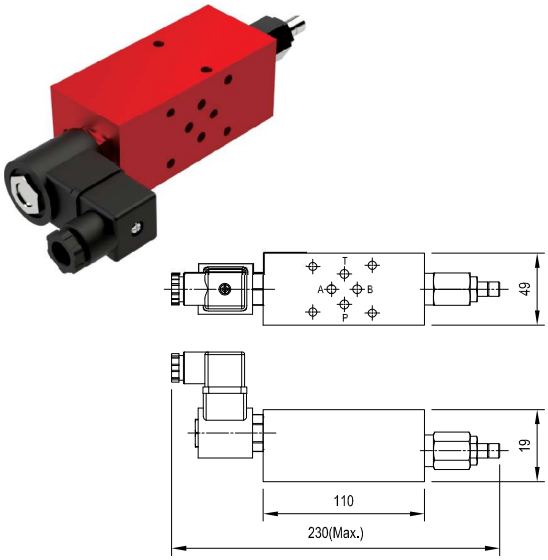	Single acting speed control (CETOP-3) DS 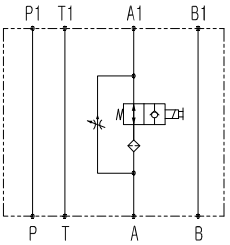

Working pressure (Max.)	flow (Max.)	Ports size
250 kg·f/㎠	20 ℓ/min	

A	DSB	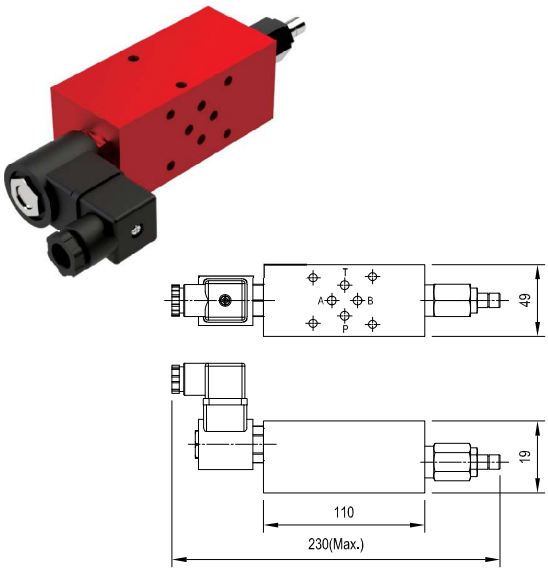	Double acting speed control (CETOP-3) DSB 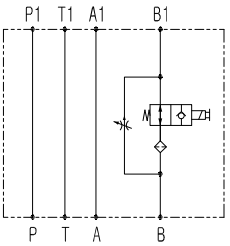

Working pressure (Max.)	flow (Max.)	Ports size
250 kg·f/㎠	20 ℓ/min	

Note. Please contact Hydro-tek for different specification of solenoid sandwich block.

11 DC Power pack item code – A

(Please refer ① ~ ⑩ for this item code)

BOX TYPE POWER PACK

	ITEM CODE	LX	LM	LS
	Box design	Box type without button case smaller than LS	Box type with button case smaller than LS	Box type with button case smaller than LC

B — DIMENSION

LX

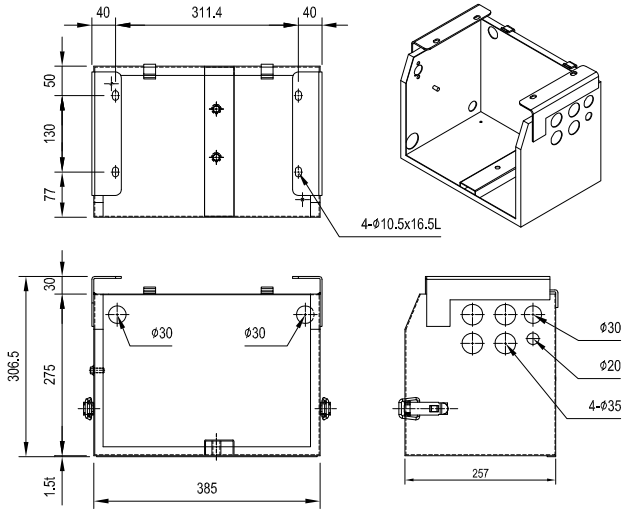

ASSEMBLY

LM

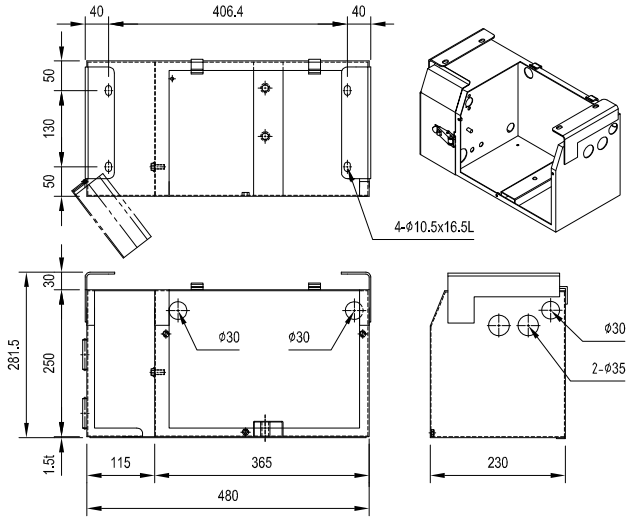

ASSEMBLY

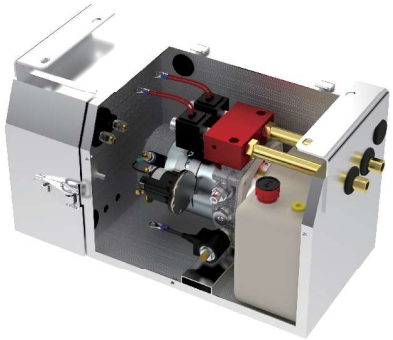

LS

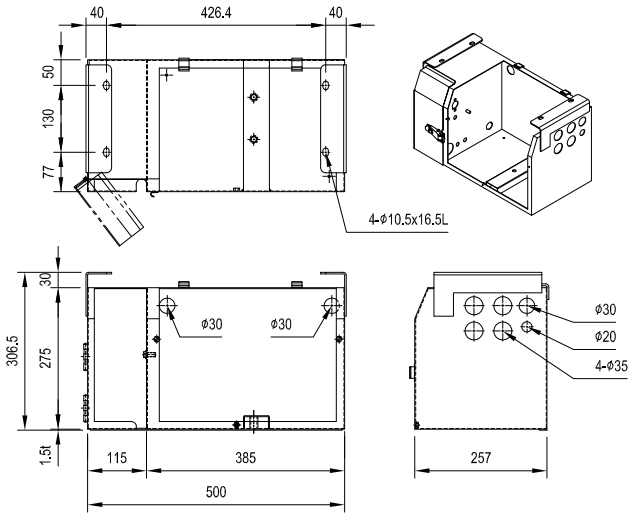

ASSEMBLY

Note. Please contact Hydro-Tek for Steel box.

ITEM CODE	LC	WR
Box design	Box type with button case	Box type without button case

B — DIMENSION

LC

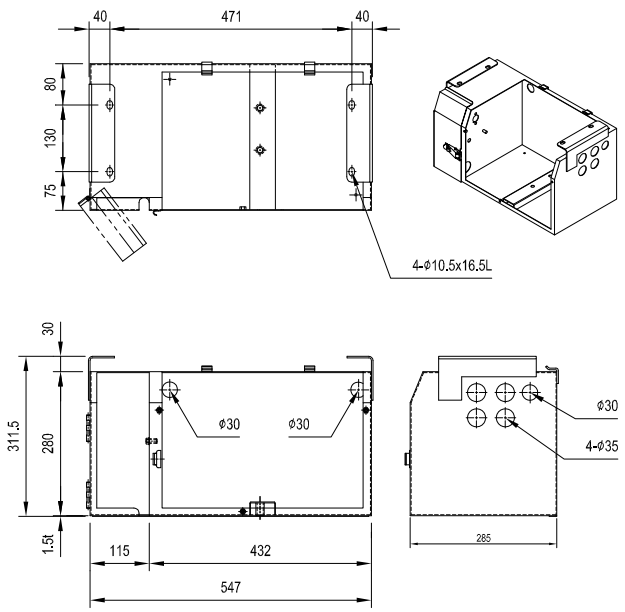

ASSEMBLY

WR

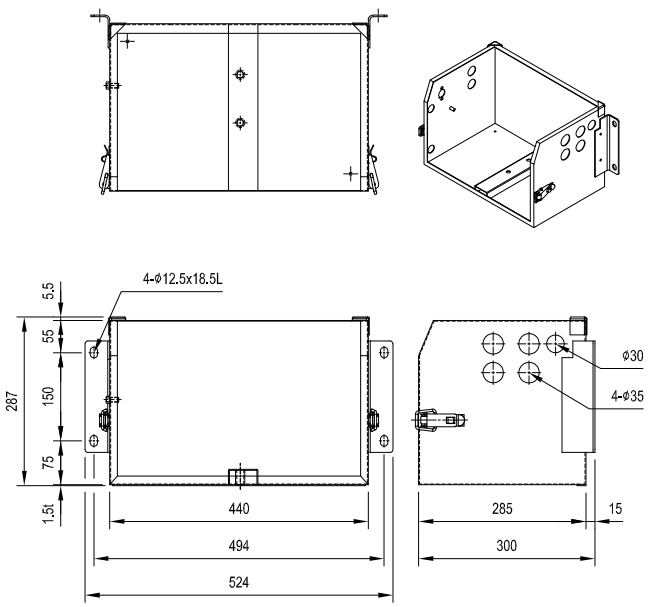

ASSEMBLY

A	DIMENSION	Typical box type power pack combination			
		One single acting cylinder	Two single acting cylinder	One single acting cylinder and one double acting cylinder	Two double acting cylinder
		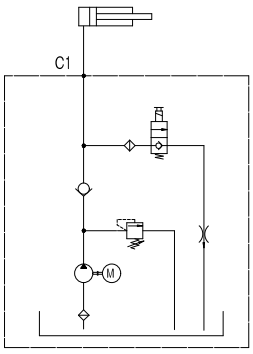	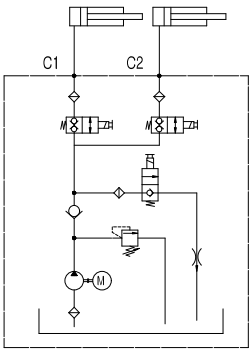	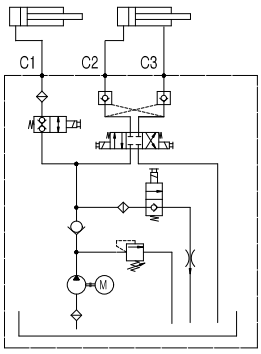	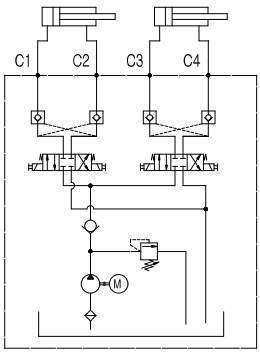

Note.
1. This box type power pack is only for DC motor power pack.
2. Only 'Square type 6 Liter' (PL06) are availible for box type power pack.
3. Please contact Hydro-Tek for special specification or custom design.

Ordering sample (In case of Wing body)

D222T2X-XA1C-GO21X-HPCX-PL06-BYF1-BYW1-YA221L-WR

Example	
Motor	DC 24V
Pump	2.1 cc/rev
Tank	Square 6 L

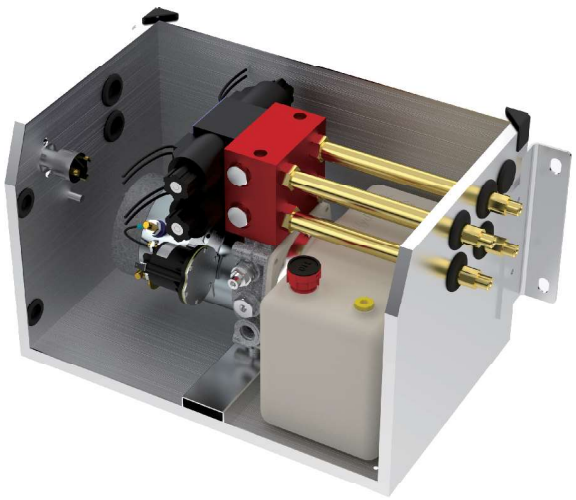

ITEM CODE	ITEM CODE	ITEM CODE
D228JN	**BYF-YA211L-DA28JL**	**BYF1-BYW1-YA221L**
Two single acting cylinder	One single and one double acting cylinder	Two double acting cylinder (Wing body)
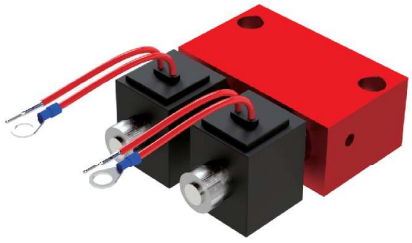	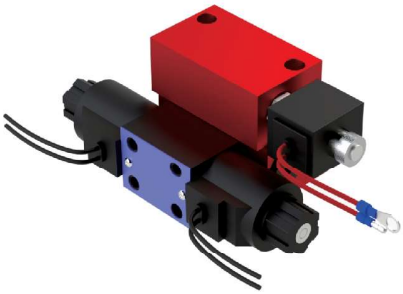	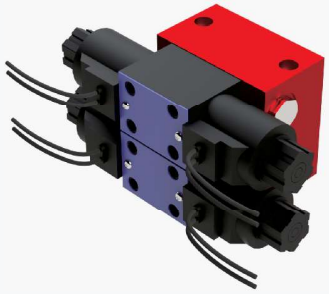

H	4	S	2	G	4	E
A / B /	C	/ D /	E /	F		

PENDENT CONTROLLER & RADIO REMOTE CONTROLLER

A	ITEM CODE	H	F	R
	TYPE	Pendent button switch controller	Wingbody switch	Radio remote controller

B	ITEM CODE	Quantity of Buttons
	Quantity	2 ~ 9 (10 Buttons : 0)

C	ITEM CODE	S1	S2	SD	D1	D2	SS
	Cylinder type	One Single acting	Two single acting	One Single & One double acting	One Double acting	Two Double acting	Special

D	ITEM CODE	G	S	X
	TYPE	General cable	Spiral cable	Without cable

E	ITEM CODE	Length of Cable (Unit : M)	X
	Length	1 ~ 9 (10M : 0)	Without cable

F	ITEM CODE	E	X
	Emergency	O	X

MOUNTING LOCATION

WITH EMERGENCY

Picture

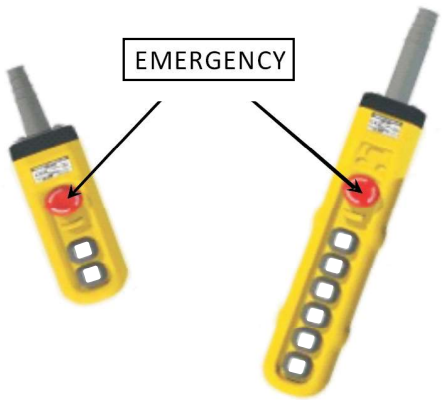

Dimension

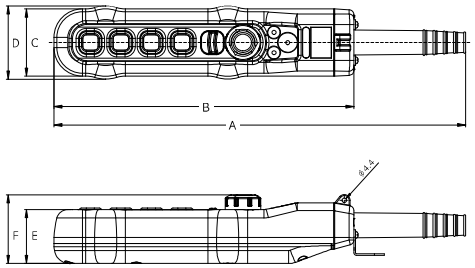

ITEM CODE	A	B	C	D	E	F
H2****E	287.7	206.9	66	66	53	67.5
H4****E	404.7	294.9	66	72	53	67.5
H6****E	464.7	354.9	66	72	53	67.5

WITHOUT EMERGENCY

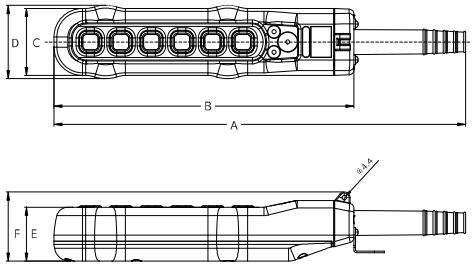

ITEM CODE	A	B	C	D	E	F
H2****X	123.7	96.7	66	66	45	47.5
H4****X	241.7	156.7	66	66	45	47.5
H6****X	404.7	294.9	66	72	53	67.9
H7****X	464.7	354.9	66	72	53	67.9

CONTACT PART COMPOSITION & DIMENSION

Name	Contact block	Block composition	Rating	Dimensions
HC-HE100 (1b)			6A 250V	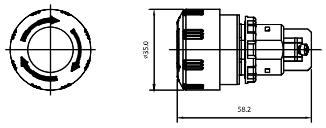
HC-HA100 (1a,-1a, 1stage)		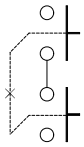	6A 250V	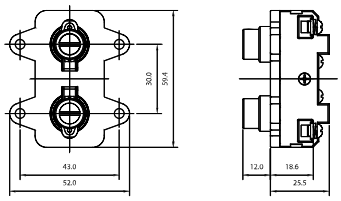
HC-HC100 (2a,-2a, 1stage)		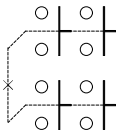	6A 250V	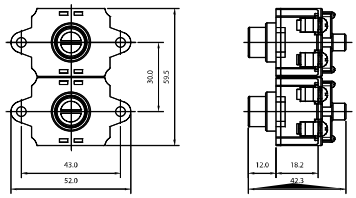
HC-HT100 (2a,-2a, 1stage)		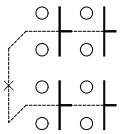	6A 250V	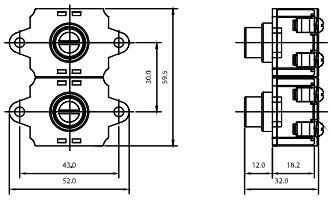

PUSH BUTTON WITH INTERNATIONAL SYMBOLS

■ ENGLISH

UP DW E W S N RAISE LOWER CLOSE OPEN

■ SYMBOL MARKS

■ KOREAN

상 하 좌 우 전 후 열림 닫힘 고속 동 서 남 북

WINGBODY SWITCH	
FEATURES	Water-proof push button is general automatic machine and will be able to use widely with the switch of on/off operation. It planned to style the water-proof of vertical scope 60 ˚ which does not have the effect harmful.

RATING	CONTACT BLOCK	CONTACT TERMINAL	SYMBOL MARKS	CASE MATERIAL
6A 250V AC	1a - 1a	M4	UP (BLACK)	HIGH IMPACT - ABS
	1b - 1b		DW (RED)	

DIAGRAM

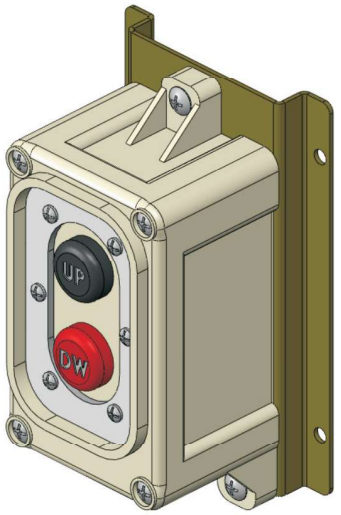

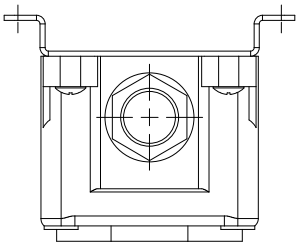

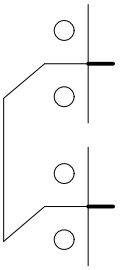

1a-1a

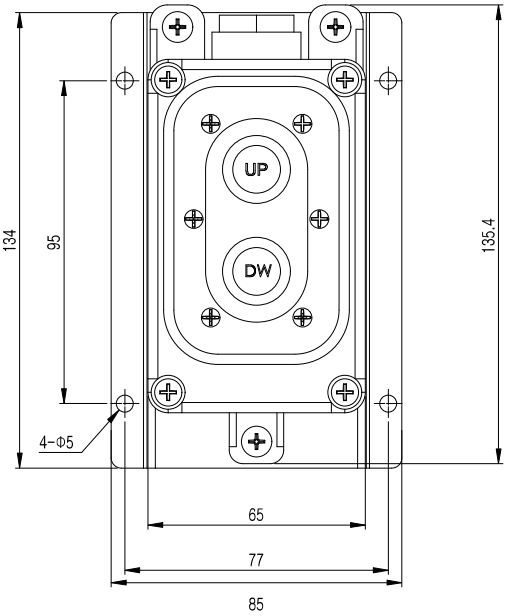

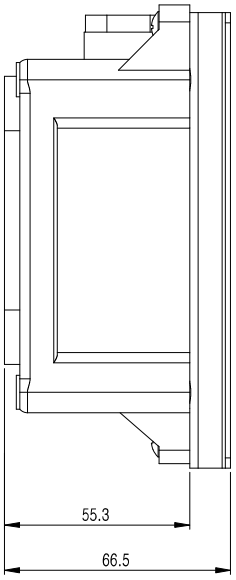

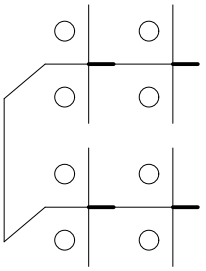

2a-2a

Radio remote controller

SPECIFICATION	Rating	Contact	Insulation Resistance	Dielectric Strengty	Temperature range	Humidity range	Protection Structure
	6A 250V AC	AgSnO2	100Mo (Min.)	1,500V AC (Min.)	-15˚C ~ +45˚C	45 ~ 85% RH	IP - 55

Picture & Dimension

TRANSMITTER UNIT (2 BUTTONS)

MODEL	REMOTE CONTROL
DIMENSION	140 x 58 x 30
WEIGHT	194g
MATERIAL	ABS
COLOR	YELLOW
FREQUENCY	447.6 ~ 447.9875 Mhz
TEMP.	-10℃ ~ 60℃
RATED VOLT.	DC 3.7V
AMP	0.85VA
OUTPUT	1.9VA
COMMUNI - CATION	1 WAY
NOTE	30 HOURS CONTINUOUS DUTY

TRANSMITTER UNIT (4 BUTTONS)

MODEL	REMOTE CONTROL
DIMENSION	140 x 58 x 30
WEIGHT	194g
MATERIAL	ABS
COLOR	YELLOW
FREQUENCY	447.6 ~ 447.9875 Mhz
TEMP.	-10℃ ~ 60℃
RATED VOLT.	DC 3.7V
AMP	0.85VA
OUTPUT	1.9VA
COMMUNI - CATION	1 WAY
NOTE	30 HOURS CONTINUOUS DUTY

TRANSMITTER UNIT (6 BUTTONS)

MODEL	REMOTE CONTROL
DIMENSION	140 x 58 x 30
WEIGHT	194g
MATERIAL	ABS
COLOR	YELLOW
FREQUENCY	447.6 ~ 447.9875 Mhz
TEMP.	-10℃ ~ 60℃
RATED VOLT.	DC 3.7V
AMP	0.85 VA
OUTPUT	1.9 VA
COMMUNI-CATION	1 WAY
NOTE	30 HOURS CONTINUOUS DUTY

RECEIVER UNIT

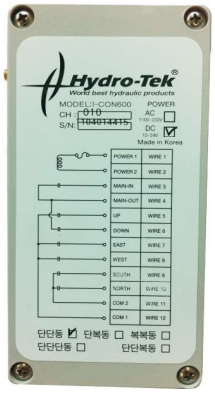

MODEL	REMOTE CONTROL
DIMENSION	160 x80 x 55
WEIGHT	700g
MATERIAL	ABS
COLOR	GRAY
FREQUENCY	447.6 ~ 447.9875 Mhz
TEMP.	-10℃ ~ 60℃
RATED VOLT.	DC 5V
AMP	3 VA
INPUT POWER	AC 110V ~ 22OV DC 12V ~ 24V
RATED RELAY	2A / 125VAC
NOTE	-

DIAGRAM

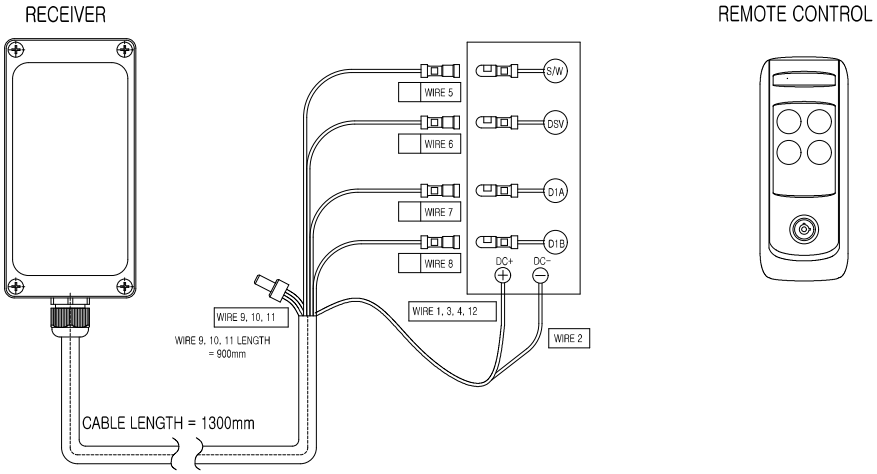

Note.
1. Check all screws on the pack are tightened.
2. Check internal cabling and connecting terminals are tightly closed.
3. Check all gaskets and rubber parts are in good working order.
4. Check the case is in good condition.

ORDER EXAMPLE

H2****X

(2 BUTTON / WITHOUT EMERGENCY)

H2****E

(2 BUTTON / WITH EMERGENCY)

H4****X

(4 BUTTON / WITHOUT EMERGENCY)

H4****E

(4 BUTTON / WITH EMERGENCY)

H6****X

(6 BUTTON / WITHOUT EMERGENCY)

H6****E

(6 BUTTON / WITH EMERGENCY)

H8****X

(8 BUTTON / WITHOUT EMERGENCY)

SPECIAL ORDER EXAMPLE

H2****E

H4****E

H6****E

- Speed control volume
- Type of name plates which is various selection
- Volume dosage selection (1K, 3K, 5K)

DIMENSIONS & 10 HOLE	
	HC-10EPMH
Pendent switch	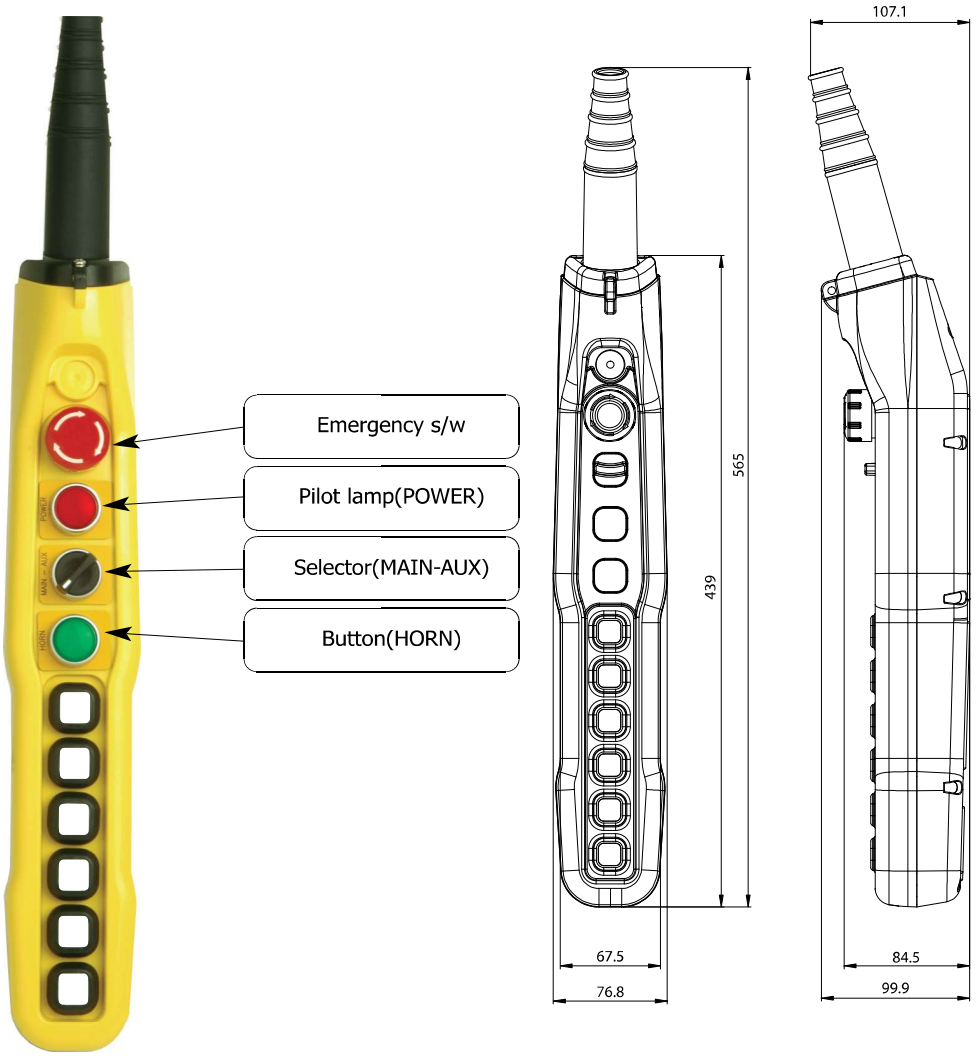

PUMP & MOTOR UNIT

Note. Please refer to "Coding No.1" for DC Motor detail item code

Motor	Sub-Plate					PUMP
 DA08 / DB08	A	FR	FOOT	O		 GO11X3 ~ GO58X3
			RELIEF	O		
 D113 / D213		OR	FOOT	X		
			RELIEF	O		
 D116 / D222		FX	FOOT	O		
			RELIEF	X		
		OX	FOOT	X		
			RELIEF	X		
 L230XXMPU		DF	FOOT	O		 GO11X4 ~ GO58X4
			RELIEF	X		
 L240XXJPU		DX	FOOT	X		
			RELIEF	X		
	A	XX	without Sub-plate (Direct-type)			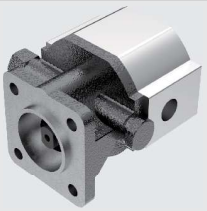 3.2cc/rev ~ 4.3cc/rev

13 A / B / C X Brand — PUMP & MOTOR UNIT

A	Gear pump **G**

B / C

ITEM CODE		Specification			
B	C	Displace - ment (cc/rev)	Flow (Liter/min @2500 RPM) DC	Max. operating pressure (kg·f/㎠)	Max. peak pressure (kg·f/㎠)
Group	Code				
H	**02**	0.2	0.5	190	230
H	**03**	0.3	0.7	190	230
H	**05**	0.5	1.2	190	230
H	**07**	0.7	1.7	190	230
H	**11**	1.1	2.7	190	230

Please refer to "Coding No.3" for detail dimension
(See page 87)

B / C

ITEM CODE		Specification			
B	C	Displace - ment (cc/rev)	Flow (Liter/min @2500 RPM) DC	Max. operating pressure (kg·f/㎠)	Max. peak pressure (kg·f/㎠)
Group	Code				
O	**08**	0.8	2.0	230	270
O	**11**	1.1	2.7	230	270
O	**13**	1.3	3.2	230	270
O	**16**	1.6	4.0	230	270
O	**21**	2.1	5.2	230	270
O	**23**	2.3	5.7	230	270
O	**27**	2.7	6.7	230	270
O	**32**	3.2	8.0	210	250
O	**37**	3.7	9.2	210	250
O	**42**	4.2	10.5	210	250

14 A / B — PUMP & MOTOR UNIT BLOCK

A

Modular block with cartridge solenoid valve for pump & motor unit type

Function	One single acting cylinder	Two single acting cylinder
Item Code	**T1**	**T2**
Diagram	Dimension	Dimension

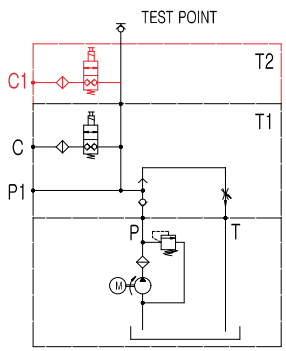

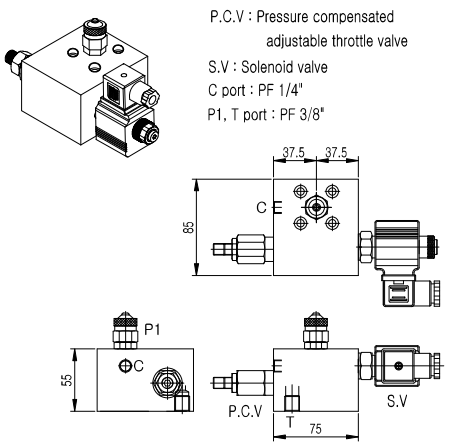

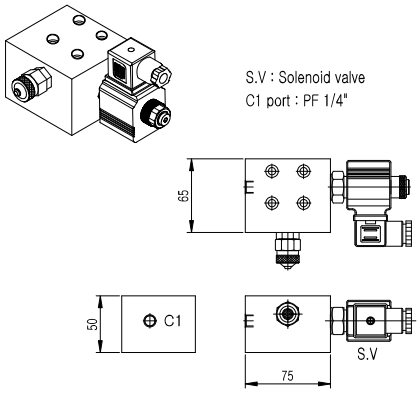

B

ITEM CODE	**1**	**2**
VOLTAGE	12V	24V

Note. T2 block needs T1 block for its function.

PUMP & MOTOR UNIT BUILT-IN

Relief valve	
Code	Pressure range
A	10 ~ 60 kg.f/cm²
B	50 ~ 150 kg.f/cm²
C	100 ~ 200 kg.f/cm²

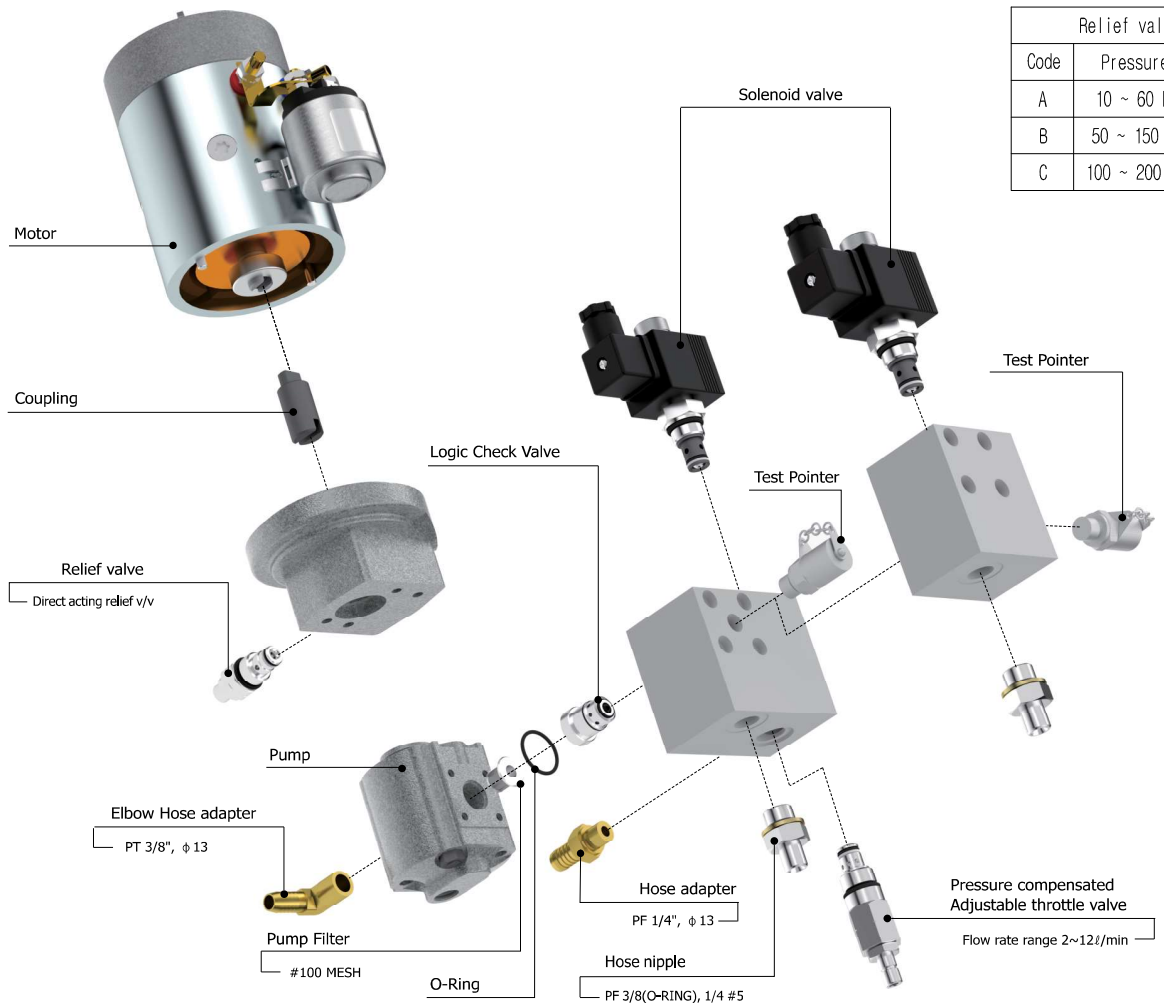

DIMENSION

PUMP & MOTOR UNIT ASS'Y

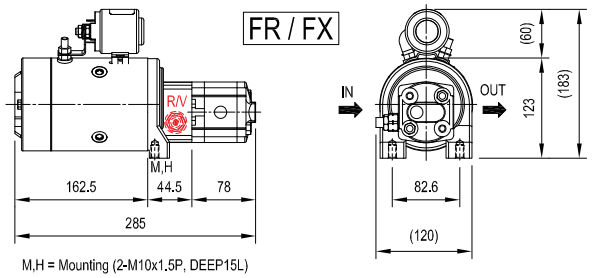

M,H = Mounting (2-M10x1.5P, DEEP15L)

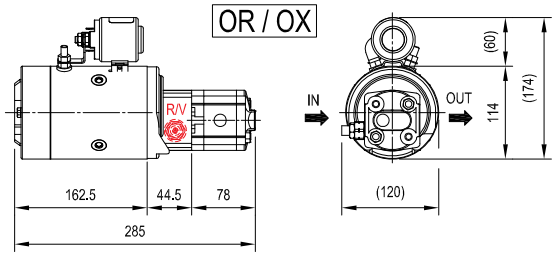

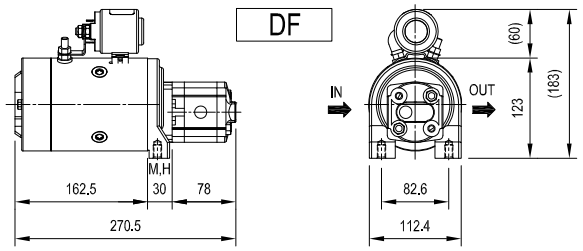

M,H = Mounting (2-M10x1.5P, DEEP15L)

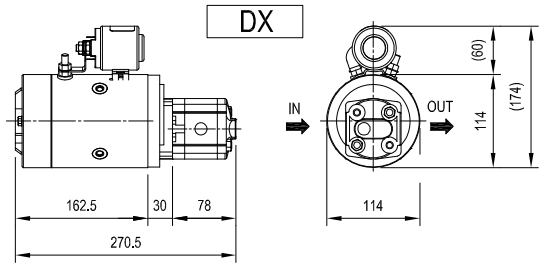

Note. APPLICABLE MOTOR CODE : MA08, MB08, D113, D213, D116, D222, D124, D420, L116, L222, D230, L230

15	L	C	2	8	*	N
	A/	B/	C/	D/		E

LIFT VALVE

A	LIFT VALVE ITEM CODE **L**			
B	ITEM CODE	**C**	**O**	**D**
	DIAGRAM	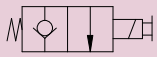	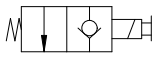	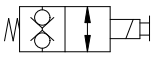
		Normally closed	Normally open	Double lock

C	ITEM CODE	**1**	**2**	**3**	**4**
	VOLTAGE	DC 12V	DC 24V	AC 110V	AC 220V

D	ITEM CODE	CAVITY	PRESSURE (Max.)	FLOW (Max.)	PORT SIZE			
					P	T	P1	C
	8	08	250 kg·f/㎠	23 ℓ/min	PF3/8"	PT3/8"	PT3/8"	PT3/8"

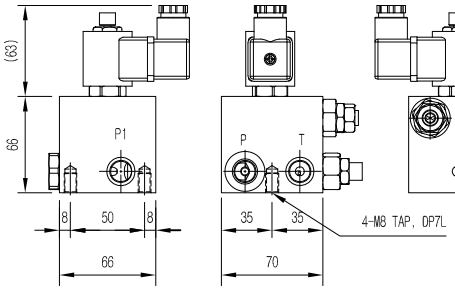

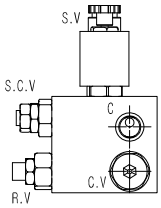

C.V = Check valve
R.V = Relief valve
S.V = Solenoid valve
S.C.V = Speed control valve

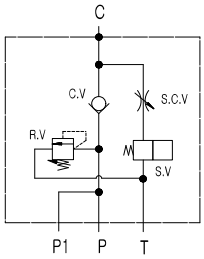

15	V	C	2	8	*	N
	A/	B/	C/	D/		E

SOLENOID VALVE

A	SOLENOID VALVE ITEM CODE **V**			
B	ITEM CODE	**C**	**O**	**D**
	DIAGRAM	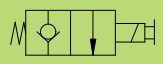	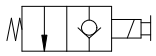	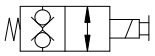
		Normally closed	Normally open	Double lock

C	ITEM CODE	**1**	**2**	**3**	**4**
	VOLTAGE	DC 12V	DC 24V	AC 110V	AC 220V

D	ITEM CODE	CAVITY	PRESSURE (Max.)	FLOW (Max.)	PORT SIZE	
					IN	OUT
	8	08	250 kg·f/㎠	23 ℓ/min	PT1/4" / PT3/8"	PT1/4" / PT3/8"

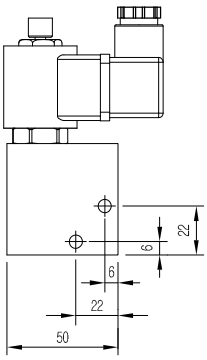

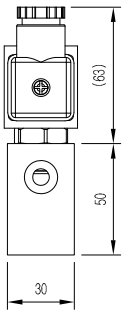

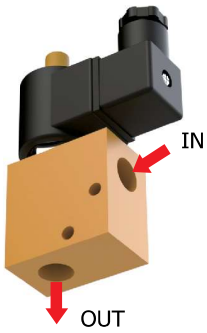

OTHERS

15 P 4 0 0
A / B

LINE TYPE PRESSURE COMPENSATED ADJUSTABLE THROTTLE VALVE

A	LINE TYPE PRESSURE CONPENSATED ADJUSTABLE THROTTLE VALVE ITEM CODE **P**

	ITEM CODE	WORKING PRESSURE (Max.)	FLOW RANGE (Max.)	PORT SIZE	
				P	C
B	400	250 kg·f/㎠	10 ℓ/min	PT1/4"	PT1/4"
	600	250 kg·f/㎠	18 ℓ/min	PT3/8"	PT3/8"
	800	250 kg·f/㎠	33 ℓ/min	PT1/2"	PT1/2"

DIMENSION

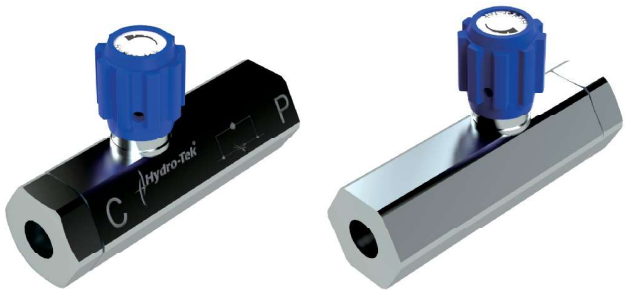

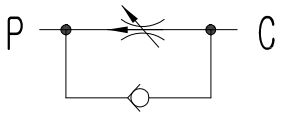

	P400	P600	P800
A	90	90	108
B	27	27	36
C	38	38	37
D	24	24	24

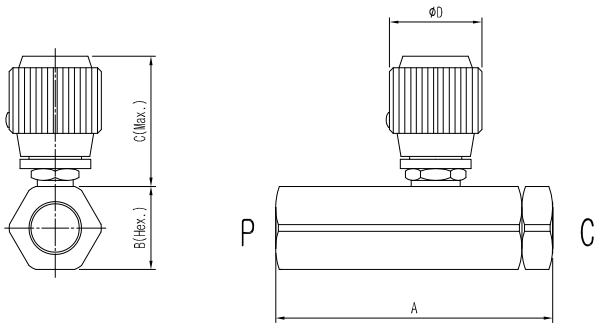

PERFORMANCE CURVE

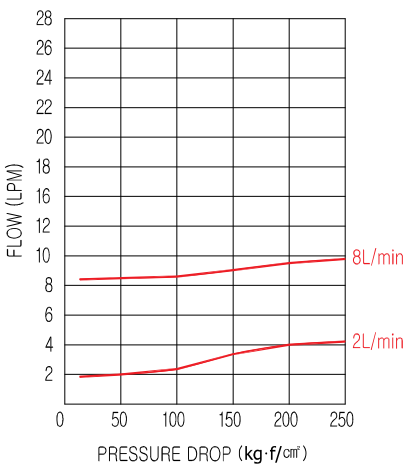

P400

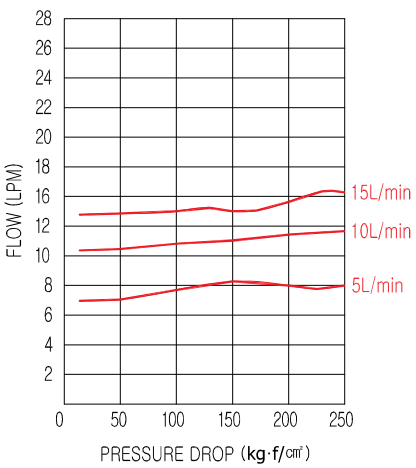

P600

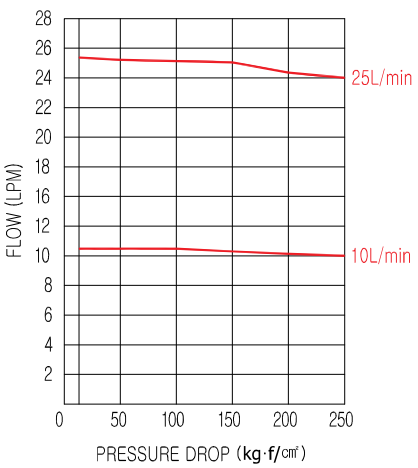

P800

OTHERS

15 F 4 0 0
A / B

LINE TYPE FLOW CONTROL VALVE

A	LINE TYPE FLOW CONTROL VALVE ITEM CODE F

B	ITEM CODE	WORKING PRESSURE (Max.)	FLOW RANGE (Max.)	PORT SIZE	
				P	C
	400	350 kg·f/㎠	25 ℓ/min	PT1/4"	PT1/4"
	600	350 kg·f/㎠	55 ℓ/min	PT3/8"	PT3/8"
	800	350 kg·f/㎠	110 ℓ/min	PT1/2"	PT1/2"

DIMENSION

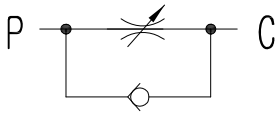

	F400	F600	F800
A	65	70	87
B	20	25	32
C	33	43.5	44
D	24	24	30

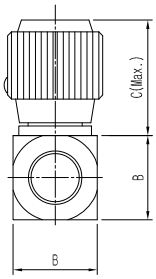

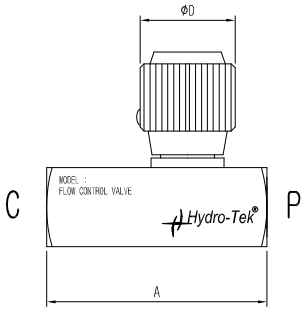

PERFORMANCE CURVE

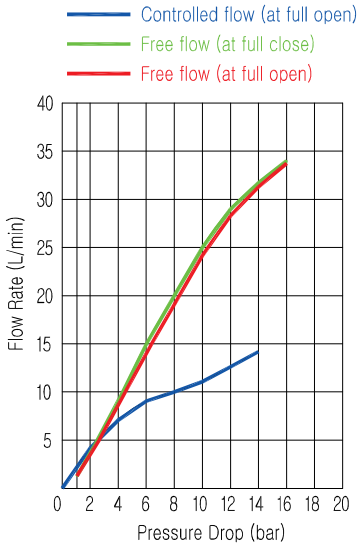

F400

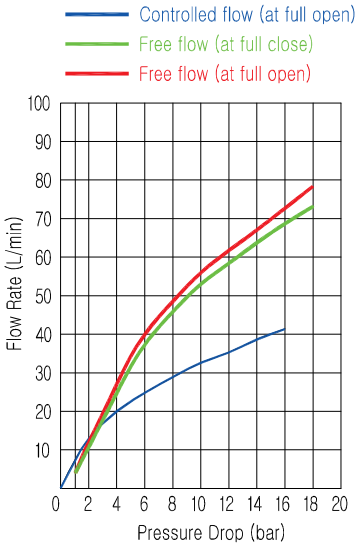

F600

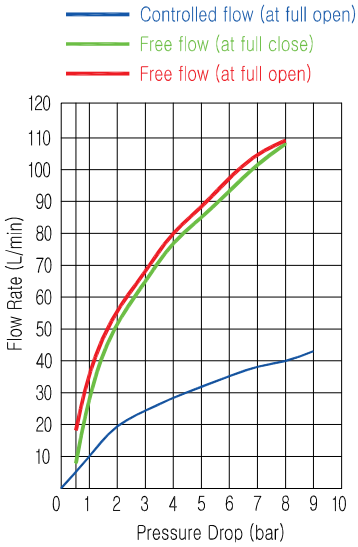

F800

OTHERS

15 W 4 0 0
A / B

LINE TYPE FLOW CONTROL VALVE

A	LINE TYPE FLOW CONTROL VALVE ITEM CODE **W**

B	ITEM CODE	WORKING PRESSURE (Max.)	FLOW RANGE (Max.)	PORT SIZE	
				P	C
	400	350 kg·f/㎠	25 ℓ/min	#5 1/4" SWIVEL	PT1/4"

DIMENSION

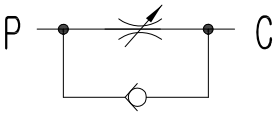

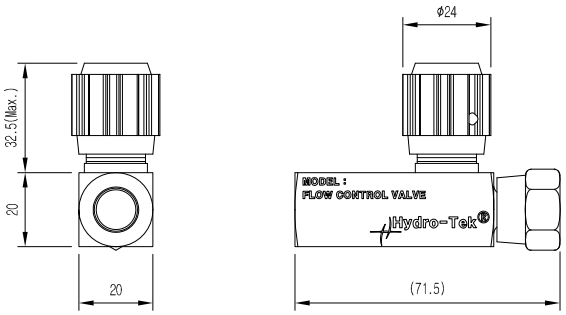

PERFORMANCE CURVE

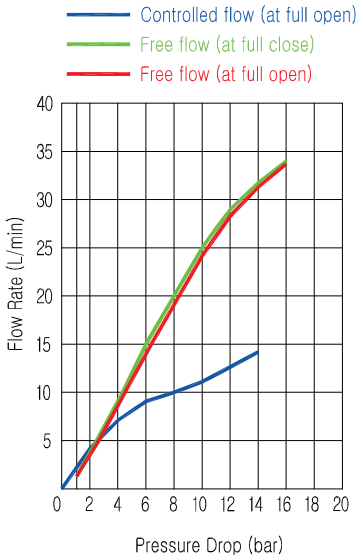

W400

OTHERS

15	B	4	0	0
	A /		B	

LINE TYPE BURST VALVE

A	LINE TYPE BURST VALVE ITEM CODE **B**

	ITEM CODE	WORKING PRESSURE (Max.)	FLOW (Min.)	FLOW (Max.)	PORT SIZE	
					P	C
B	**400**	350 kg·f/㎠	4 ℓ/min	25 ℓ/min	PF1/4"	PF1/4"
	600	350 kg·f/㎠	6 ℓ/min	50 ℓ/min	PF3/8"	PF3/8"
	800	350 kg·f/㎠	16 ℓ/min	80 ℓ/min	PF1/2"	PF1/2"

DIMENSION

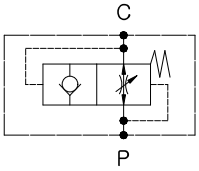

	B400	B600	B800
A	17.5	23	25
B	8	10.5	12
C	9.5	12.5	15
D	50	52	60
E	19	22	27

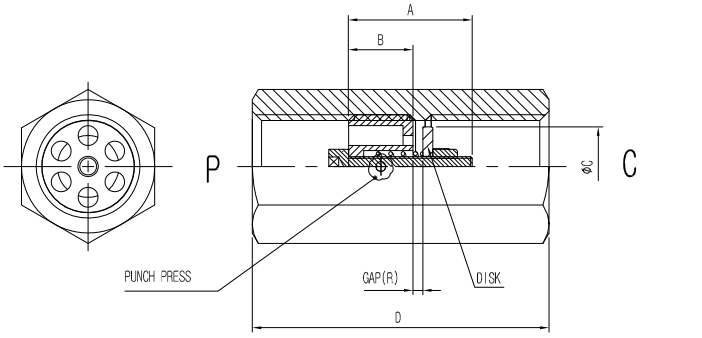

SETTING R = 2㎜

PERFORMANCE CURVE

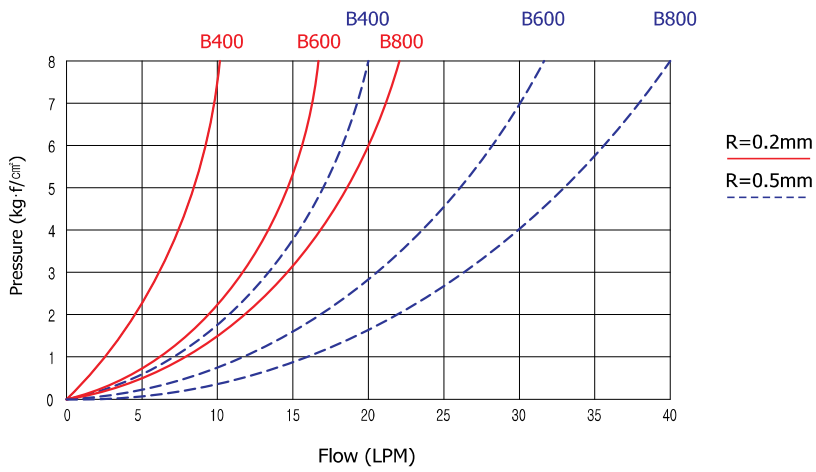

Note. When we release it, 'R' is set to as next.
Please re-set it as your application requires.
(B400=2mm, B600=2.5mm, B800=3mm)

15 D A
A / B

CARTRIDGE TYPE FLOW DIVIDER

A FLOW DIVIDER ITEM CODE **D**

B

ITEM CODE	FLOW (Min.)	OPERATING PRESSURE (Max.)	RATIO	PORT SIZE		
				P	C1	C2
A	11.4 ℓ/min	207 kg·f/㎠	50 : 50	PF1/4"	PF1/4"	PF1/4"
B	34.1 ℓ/min	207 kg·f/㎠	50 : 50	PF3/8"	PF3/8"	PF3/8"
C	60.6 ℓ/min	207 kg·f/㎠	50 : 50	PF1/2"	PF1/2"	PF1/2"

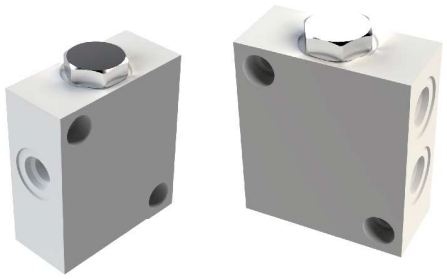

DA, DB, DC

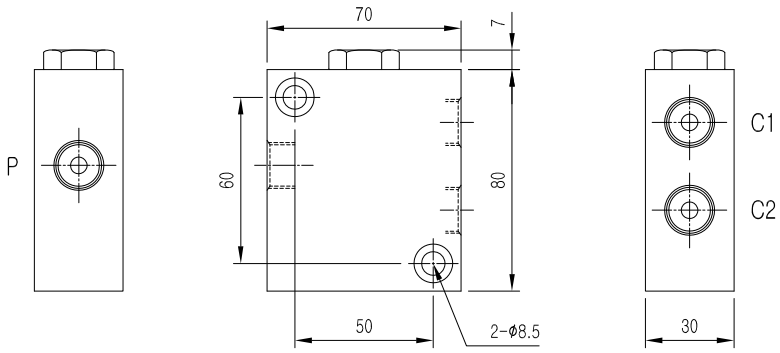

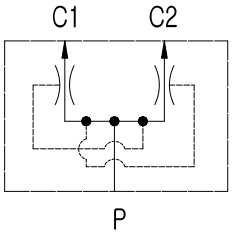

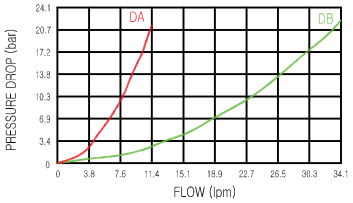

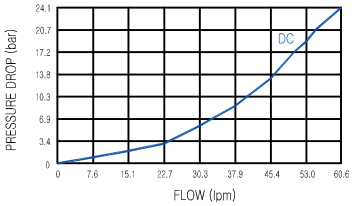

15 D S A P 2 0 – 4
A

GEAR TYPE FLOW DIVIDER

A

ITEM CODE	DISPLACEMENT	DIMENSIONS			
	cc/rev	A	L	P(INLET)	G(OUTLET)
DSAP20-4	4	50	239	PF3/4"	PF1/2"
DSAP20-6	6	52	241	PF3/4"	PF1/2"
DASP20-8	8	53	254	PF3/4"	PF1/2"

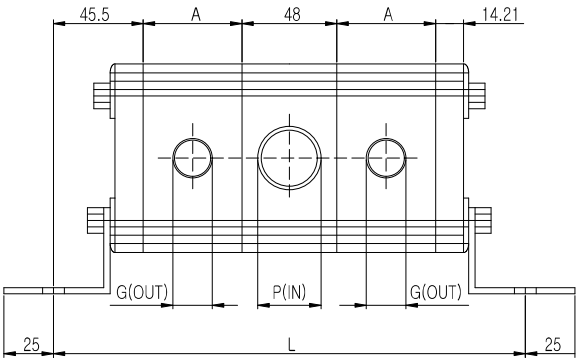

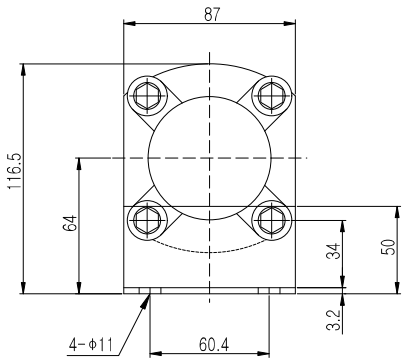

OTHERS

HAND PUMP

ITEM CODE		
HP04		
CAPACITY	4 CC	
PORT SIZE	C	PF1/4"

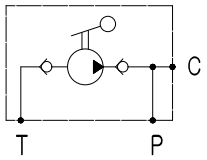

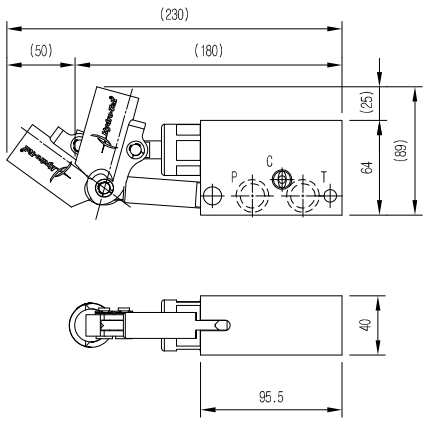

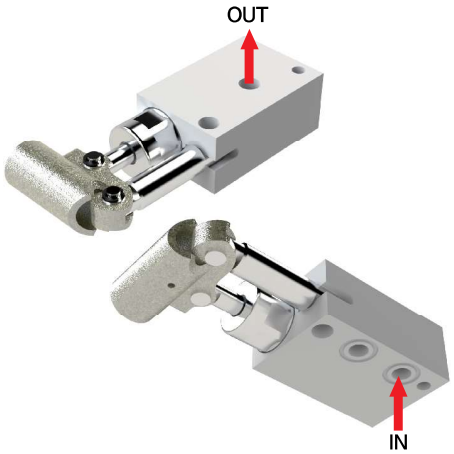

ITEM CODE		
HP10		
CAPACITY	10 CC	
PORT SIZE	P	PF3/8"
	T	PF3/8"

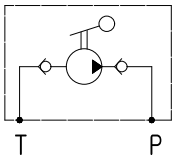

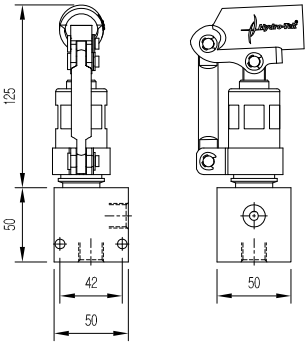

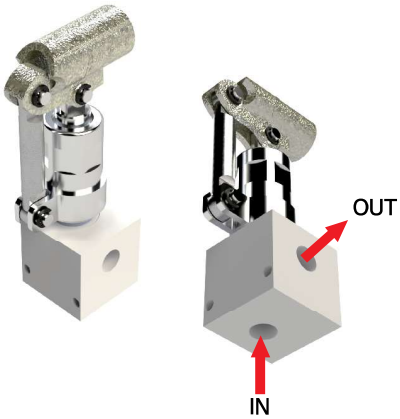

SUCTION & RETURN PIPE

SUCTION PIPE (STANDARD)

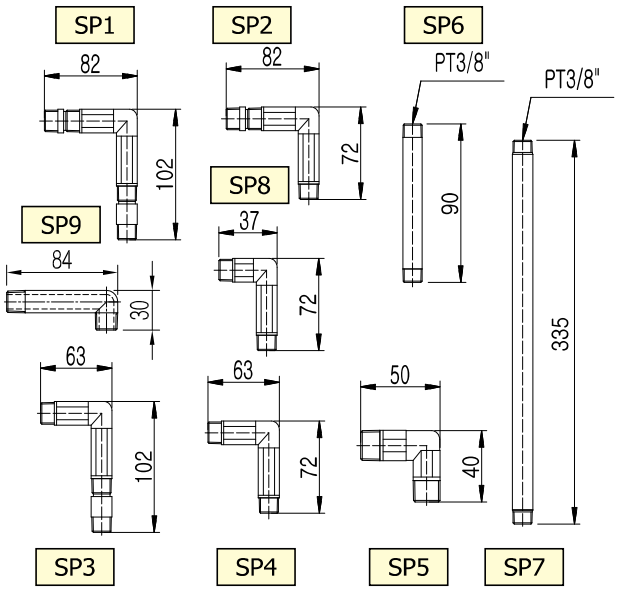

RETURN PIPE (STANDARD)

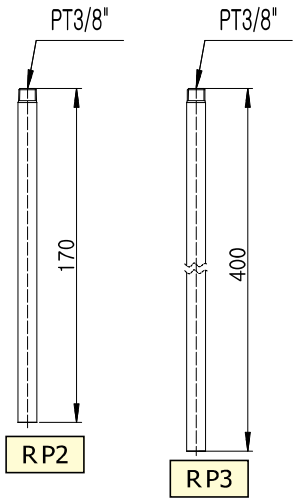

Note.

The length of suction & Return pipe depend on customer's request. (only for straight type pipe)

Suction pipe **SP** □□□

Return pipe **RP** □□□

Ex.) Suction pipe 60mm

: SP060

OTHERS

5	M	M	3	L	A	A	A	X	O
	A	/ B /	C /	D /	D /	D /	D /	E	

DIRECTIONAL MANUAL VALVE

A	ITEM CODE	Directional manual valve item code **MM**	
B	ITEM CODE	1 ~ 4	
	NUMBER OF SPOOLS	1 SPOOL ~ 4 SPOOLS	
C	ITEM CODE	L	R
	TYPE	LEFT HAND CONFIGURATION	RIGHT HAND CONFIGURATION

D

ITEM CODE	Spool distribution type ITEM CODE	
A	B	C
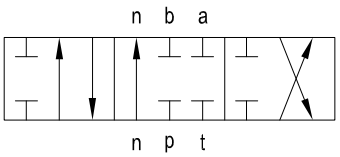	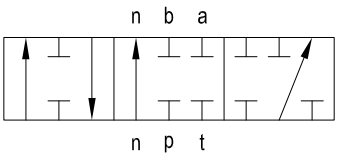	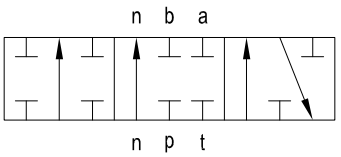
D	E	F
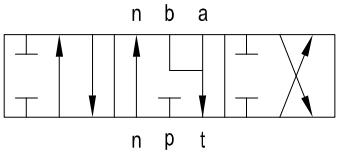	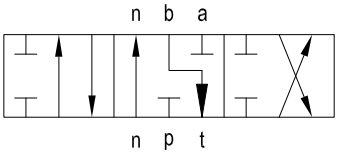	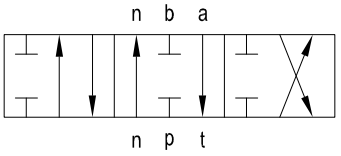

E	ITEM CODE	O	X
	TYPE	WITH ELECTRIC SWITCH	WITHOUT ELECTRIC SWITCH

SPECIFICTION DIRECTIONAL MANUAL VALVE

Nominal Flow Rate	40 ℓ/min		
Max. Operating Pressure	P = 250 bar	T = 50 bar	A,B = 300 bar
Intemal (46㎟/s) Leakage	50 ㎤/min at 100 bar		
Fluid Temperature Range	From -15℃ to 80℃		
Viscosity	From 12 to 800㎟/s permissible range	From 20 to 100㎟/s recommended range	
Ambient Temperature Range	From -40℃ to 60℃		

Note.
1. Block with common check valve
2. Way of distribution parallel
3. Spool control spring center type

CIRCUITS

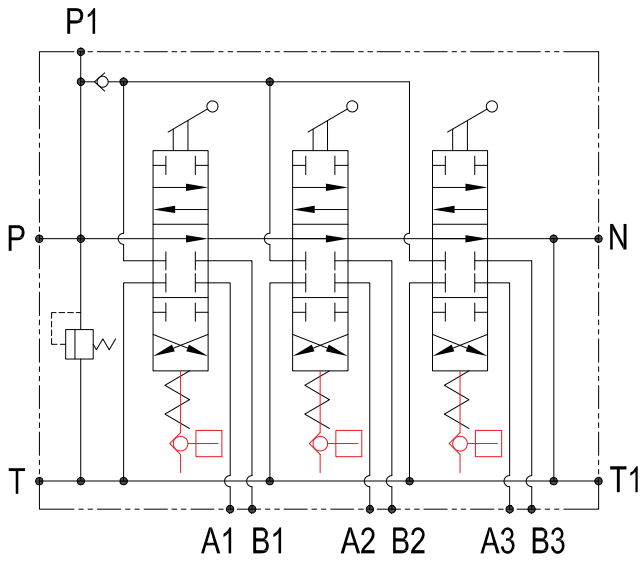

DIRECTIONAL MANUAL VALVE DIMENSION

Left hand configuration - standard

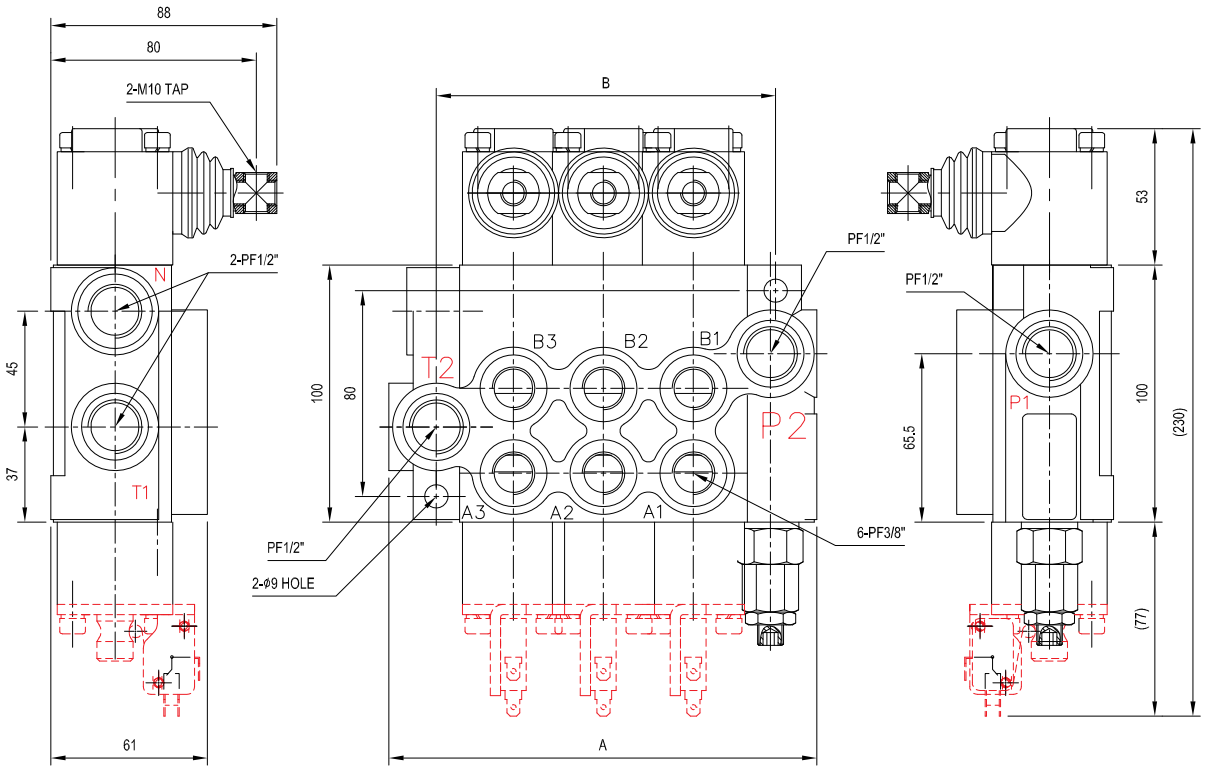

ITEM CODE	A	B	P1	P2	T1	T2
MM1LAXXXO	96.5	62	PF1/2"	X	PF1/2"	X
MM2LAAXXO	131.5	97	PF1/2"	PF1/2"	PF1/2"	PF1/2"
MM3LAAAXO	166.5	132	PF1/2"	PF1/2"	PF1/2"	PF1/2"
MM4LAAAAO	201.5	167	PF1/2"	PF1/2"	PF1/2"	PF1/2"

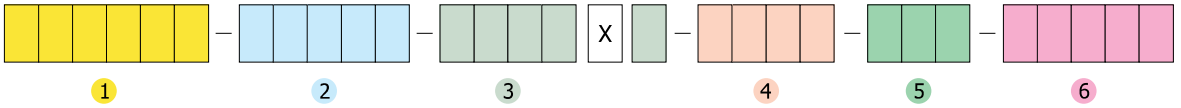

CODING SYSTEM

1 Driving Part	4 Oil Tank
2 Center Block	5 Built-in Valve
3 Pump	6 Modular Valve Block Part

Manual valve type

Cartridge Solenoid valve type

Modular valve type

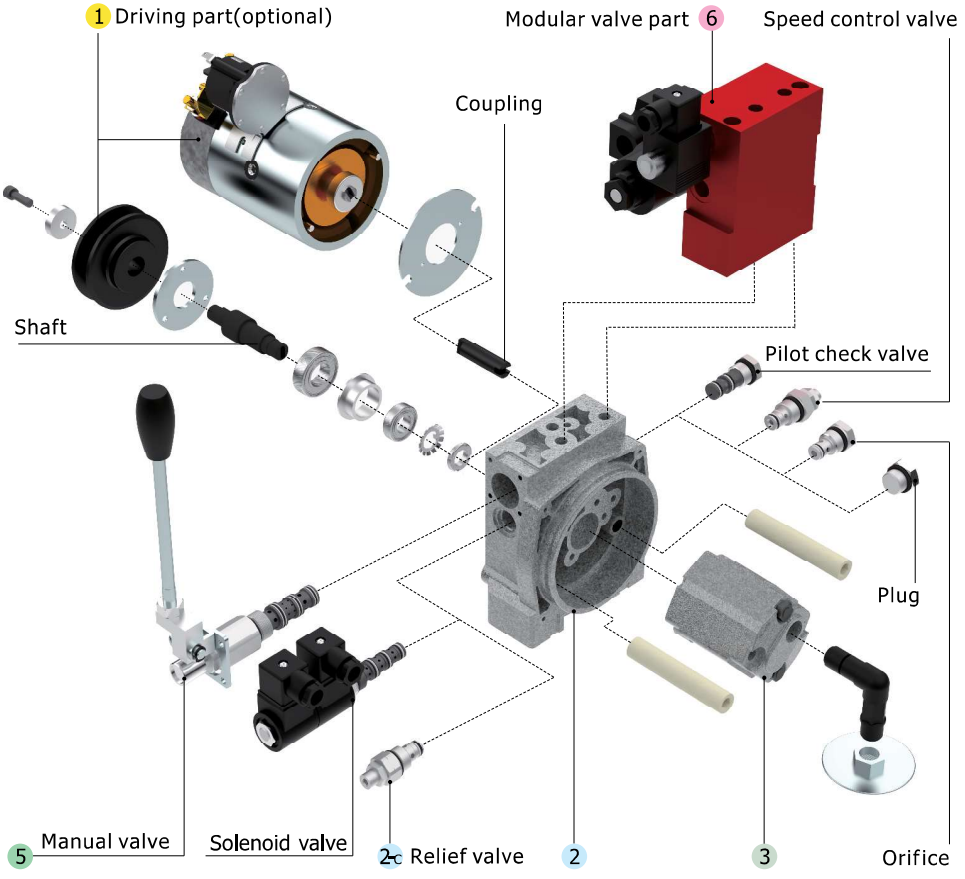

Order coding example

Description :

① Driving Part : Without Driving Part (Pulley)
② Center Block : Series-EP, Diagram No.3-type, Relief valve 180 kg·f/㎠
③ Pump : Gear Pump One Group, Clockwise, 3.2cc/rev
④ Tank : Round Type 2 Liter
⑤ Built-in Valve : Manual Valve
⑥ Modular Valve : Without Modular Valve Block

Example – X X X X X X – E P M 3 C – G O 3 2 X R – X R 0 2 – M C X – X X X X X

1 2 3 4 5 6

1 DRIVING PART ITEM CODE

ITEM CODE	Catalogue mini power pack No. 3	Pulley	XXX
TYPE	Motor (AC / DC)	Pulley	Without Dirving Part

2 CENTER BLOCK CODE

A / B / C

- Cartridge Solenoid valve type : S1~S6
- Manual valve type : M2~M6
- Modular valve type : S7

A	ITEM CODE	HEP - Series **"EP"**			
B	Circuit Symbol	S1 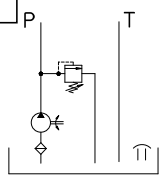	S2,M2 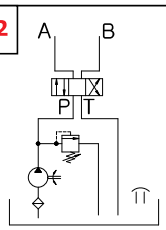	S3,M3 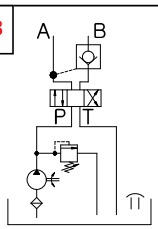	S4,M4 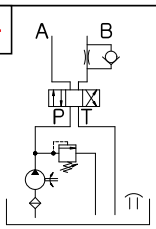
		S5,M5 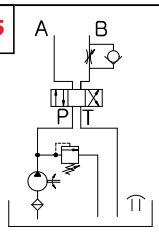	S6,M6 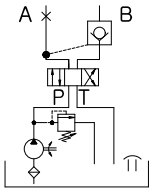 Single Acting Circuit	S7 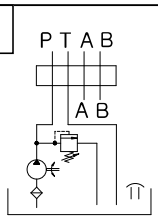	
C	ITEM CODE	Relief Valve Pressure Range			
		A	B	C	D
		10 ~ 60 kg·f/㎠	50 ~ 150 kg·f/㎠	100 ~ 200 kg·f/㎠	150 ~ 250 kg·f/㎠

3 PUMP CODE

A / B / X / C

A	Gear Pump One Group **GO**

B	ITEM CODE	Displacement (cc/rev)	Flow (Liter/min@ 2500rpm)DC	Flow (Liter/min@ 1700rpm)AC	Max. Operating pressure (kg·f/㎠)	Max. Peak pressure (bar)	Max. speed (rpm)
	08	0.8	2.0	1.3	230	270	6000
	11	1.1	2.7	1.8	230	270	6000
	13	1.3	3.2	2.2	230	270	6000
	16	1.6	4.0	2.7	230	270	6000
	21	2.1	5.2	3.5	230	270	6000
	23	2.3	5.7	3.9	230	270	6000
	27	2.7	6.7	4.6	230	270	6000
	32	3.2	8.0	5.4	210	250	5000
	37	3.7	9.2	6.2	210	250	4500
	42	4.2	10.5	7.1	210	250	4000
	48	4.8	12.0	8.1	190	230	3500
	58	5.8	14.5	9.8	190	230	3000
	70	7.0	17.5	11.9	160	200	2500
	80	8.0	20.0	13.6	160	200	2100
	98	9.8	24.5	16.6	160	200	2000

C	ITEM CODE	Blank	R
	Rotation	Counterclockwise	Clockwise

4 A / B / C — STEEL OIL TANK-M

ITEM CODE	CAPACITY (ℓ)	
	TANK	USABLE
XXX	Without Tank	
XSLE	Only Sleeve	

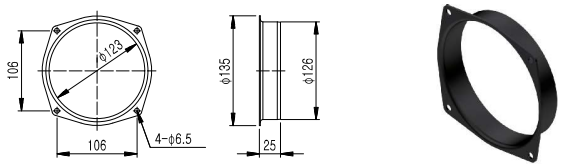

Steel oil tank for 'X & D & T' series center block & Round type

ITEM CODE	CAPACITY (ℓ)		
	TANK	USABLE	
		Horizontal Mounting	Vertical Mounting
XR01	1	0.9	0.9
XR02	2	1.7	1.9
XR03	3	2.2	2.3

V = Vertical mounting

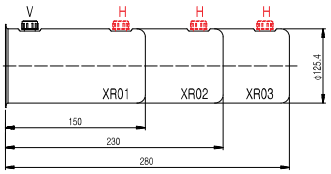

H = Horizontal mounting

ITEM CODE	CAPACITY (ℓ)			
	TANK	USABLE		
		Horizontal Mounting	Vertical Mounting	
			V-type	D-type
XR04	4	3	2.1	2.7
XR05	5	4	3.6	4.2
XR06	6	5	5.0	5.5
XR08	8	6	6.3	6.8

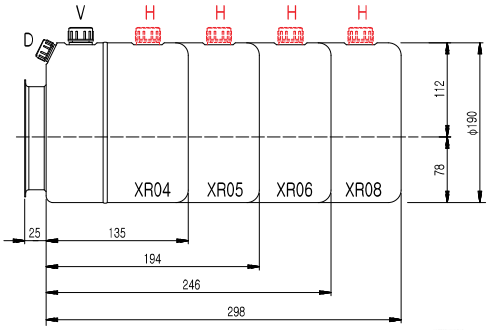

D-type

V-type

H-type

V = Vertical mounting

H = Horizontal mounting

Note. 1. Please contact Hydro-tek for your original specification and custom design.
2. Please inform us the air breather position(**D,V** or **H**) when you select Round-type oil tank.

5 A / B / C - CAPACITY — BUILT - IN VALVE CODE

A	ITEM CODE	M		S	
	TYPE	Manual Valve Code		Cartridge Solenoid Valve Code	
B	ITEM CODE	C	O	A	P
	TYPE	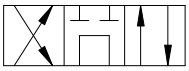	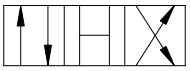	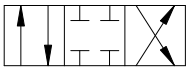	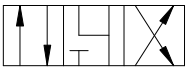
C	ITEM CODE	1	2	3	4
	Voltage	DC 12V	DC 24V	AC 110V	AC 220V

6 A / B / C / D — MODULAR VALVE CODE

Please refer to the Catalog (Mini Power pack ⑧, ⑨)

Note. 1. Driving Part, 4. Tank, 6. Modular valve block.
- Please see Hydro-Tek mini power pack catalog to get more detailed information and specs.

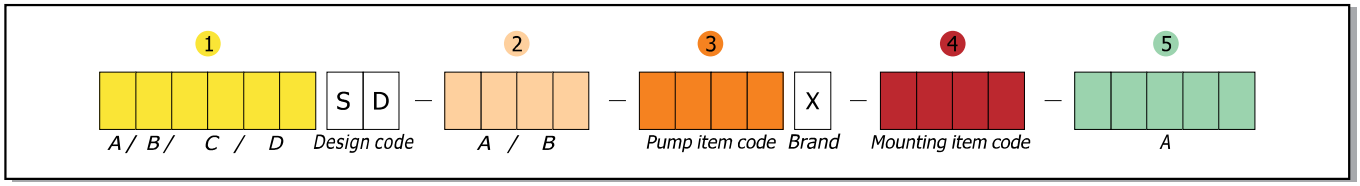

Motor ①

ITEM CODE (4POLE)	A		B	C	D	DIMENSION	
	PHASE	VOLTAGE (V)	POLE	POWER (KW)	FREQUENCY (Hz)	A	B
S40560	1Φ	220	4	0.5	60	133	151
S40760			4	0.7	60	133	166
S41160			4	1.1	60	133	181
S41560			4	1.5	60	133	201
S42260			4	2.2	60	133	236
T40556	3Φ	230/400	4	0.5	50/60	133	151
T40756			4	0.7	50/60	133	166
T41156			4	1.1	50/60	133	181
T41556			4	1.5	50/60	133	201
T42256			4	2.2	50/60	133	236

DESIGN	SD
FRAME SIZE	80
INSULATION CLASS	F

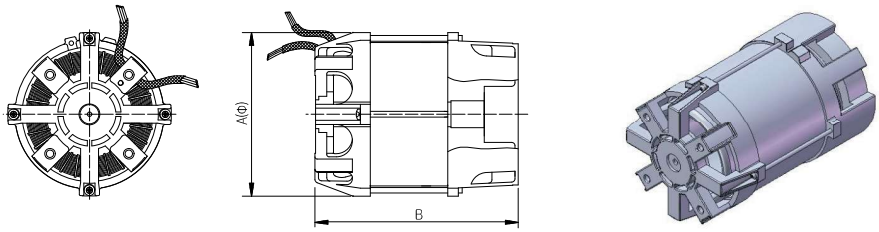

Center Block **SM** ②

A

C.V = Check valve
R.V = Relief valve
S.V = Solenoid valve
P.C.T.V = Pressure compensated fixed throttle valve
GA = Pressure compensated adjustable throttle valve

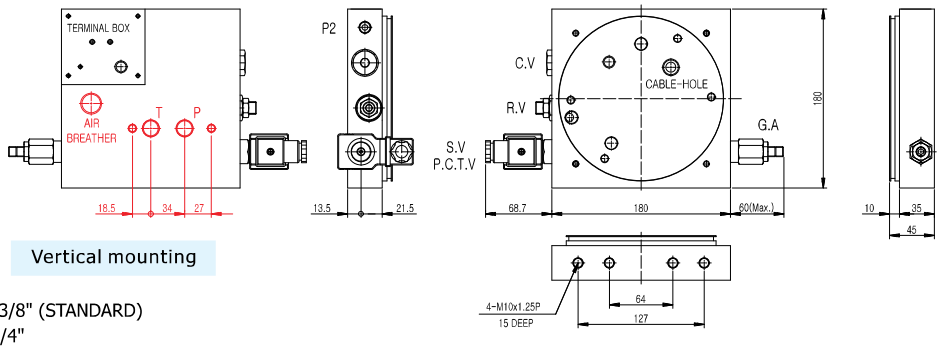

P, T = PF3/8" (STANDARD)
P2 = PT1/4"

C

Relief valve	
Code	Pressure range
L	3 ~ 10 kg · f/㎠
A	10 ~ 60 kg · f/㎠
B	50 ~ 150 kg · f/㎠
C	100 ~ 200 kg · f/㎠

B

In case of SMR - tank	In case of SMS - tank
Center block diagram (See page A-71)	**Base block diagram** (See page B-08)

Note. '*' Available on order.

Pump ③

Pump item code (See page 96)

Mounting ④

Mounting item code (See page 98)

Tank SM ⑤

ITEM CODE	CAPACITY (ℓ)		ITEM CODE	CAPACITY (ℓ)	
	TANK	USABLE		TANK	USABLE
SMR08	8	5	**SMS15**	15	12
SMR12	12	8	**SMS20**	20	18
SMR15	15	12	**SMS30**	30	25

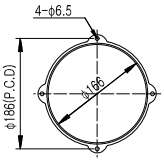

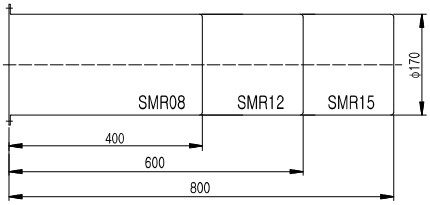

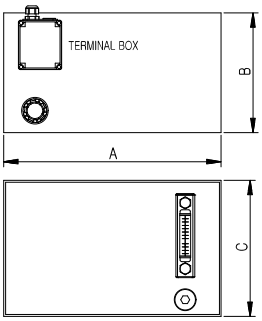

	SMS15	SMS20	SMS30
A	400	400	500
B	200	250	250
C	230	250	270

ROUND TYPE ASSEMBLY

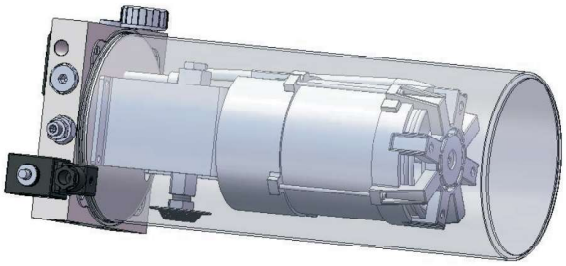

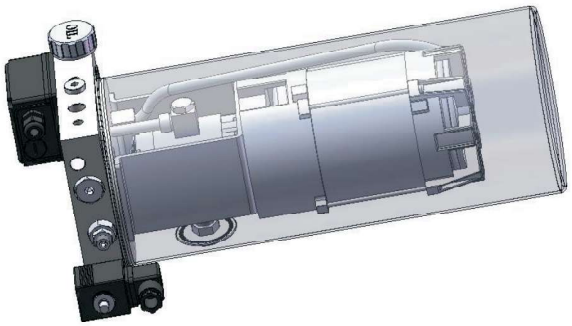

SQUARE TYPE ASSEMBLY

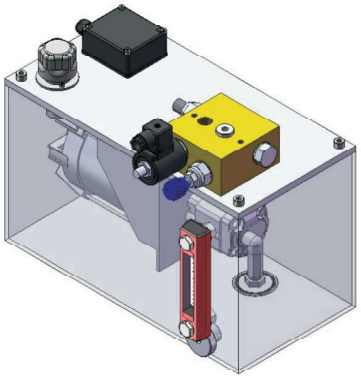

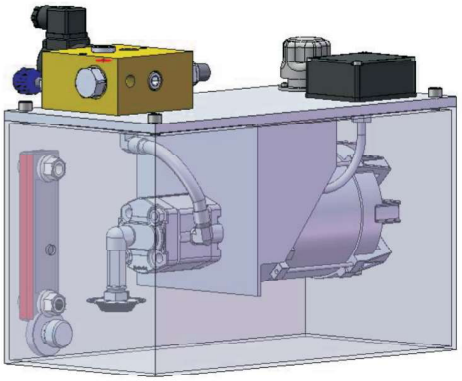

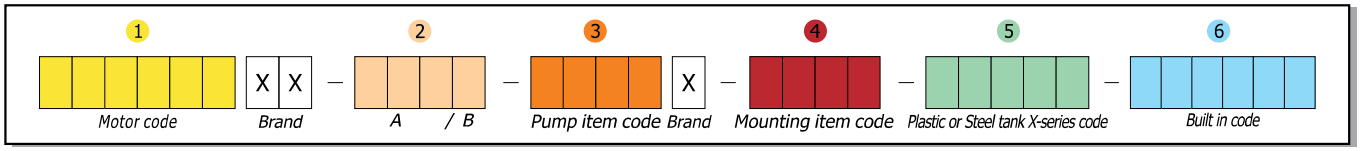

A / B

Diagram

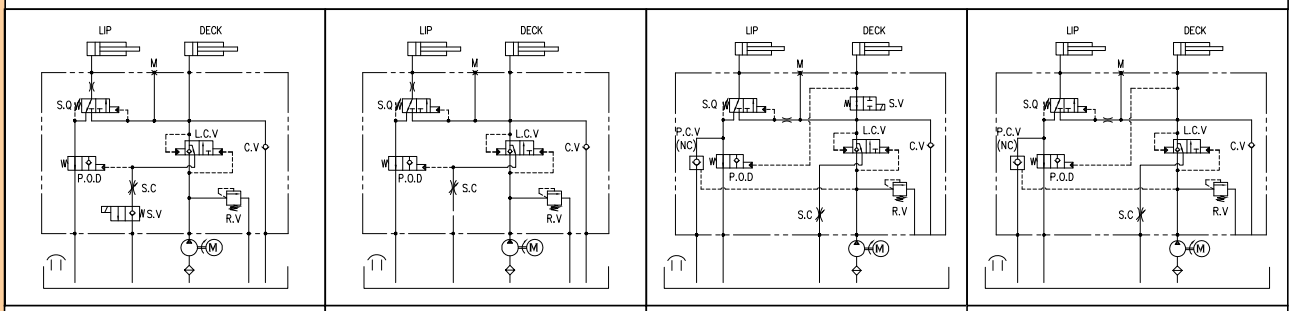

BD1	BD2	BD3	BD4

Flow Chart

Applicable Center Block Item code : BD1, BD2

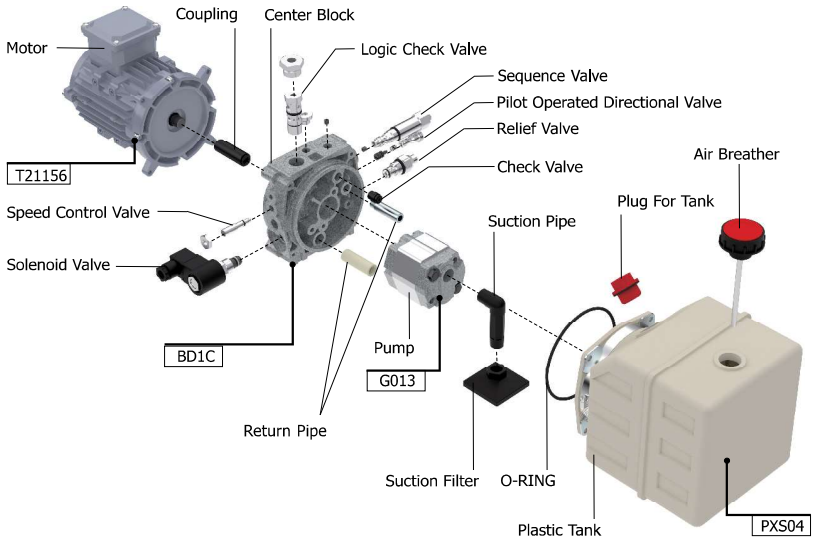

B	Relief valve
Code	Pressure range
A	10 ~ 60 kg · f/㎠
B	50 ~ 150 kg · f/㎠
C	100 ~ 200 kg · f/㎠

Applicable Center Block Item code : BD3, BD4

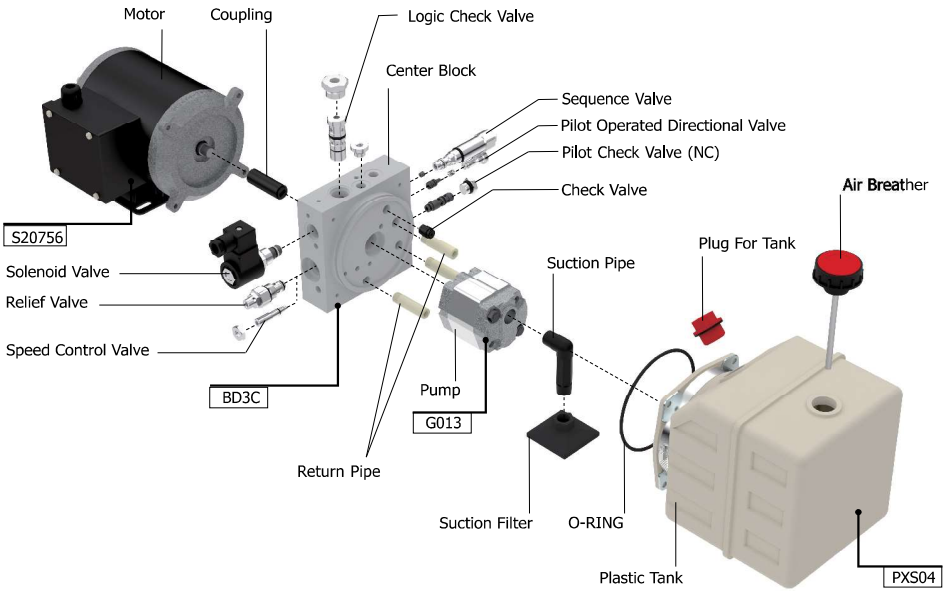

B	Relief valve
Code	Pressure range
A	10 ~ 60 kg · f/㎠
B	50 ~ 150 kg · f/㎠
C	100 ~ 200 kg · f/㎠

Flow Chart

APPLICABLE CENTER BLOCK ITEM CODE : BD1, BD2, BD3, BD4

When the main-cylinder extends,
the lip-plate retracts at the same time.

After deck at the top, Lip open	Deck is down by itself (Lip is in a state of open)	**At the same time (Deck UP, Lip folding)**
Motor Start	Motor Stop or Sol. Valve On	Motor Start → Motor Stop or Sol. Valve On

Dock leveler center block BD

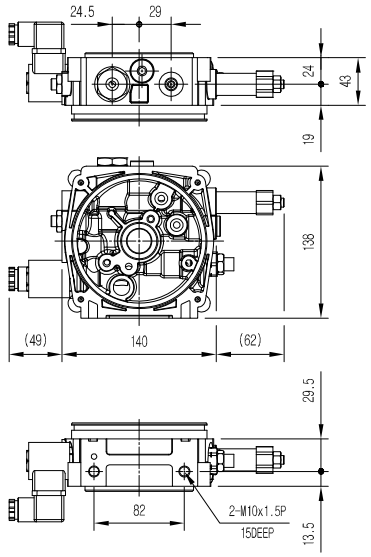

BD1,BD2

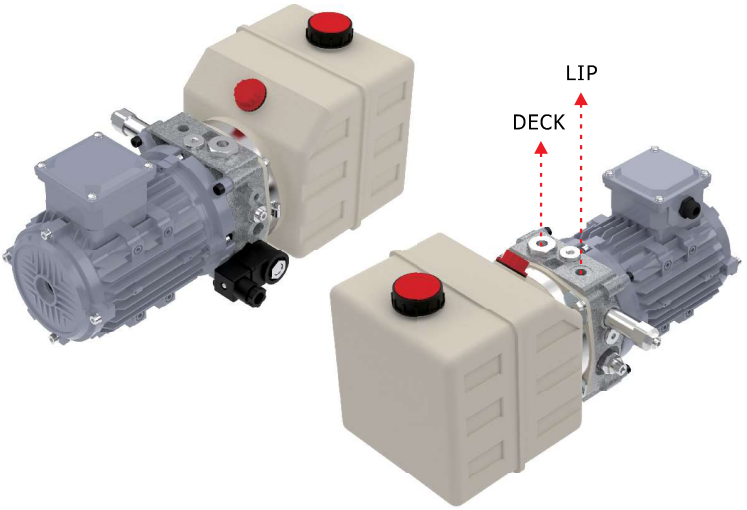

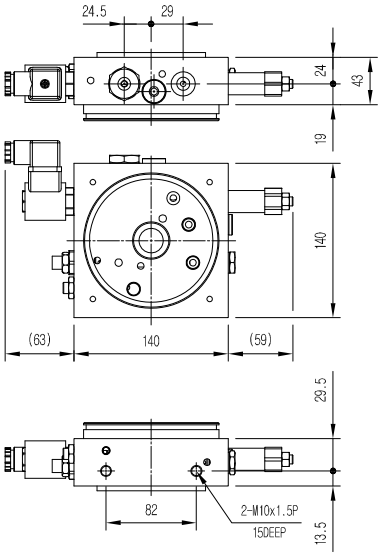

BD3,BD4

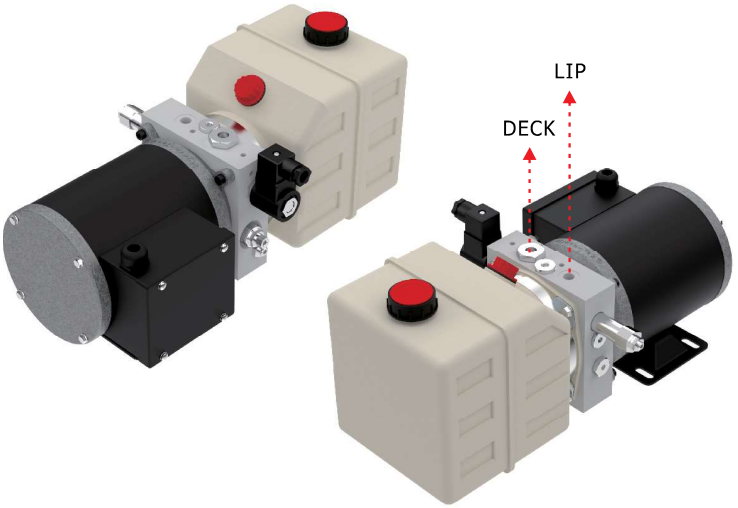

Note. Dock leveler power pack can be assembled with only X-series oil tank. (Plastic or steel oil tank)
Please see page NO. 91 & 93~95

WHEEL CHAIR POWER PACK

SAMPLE PICTURE


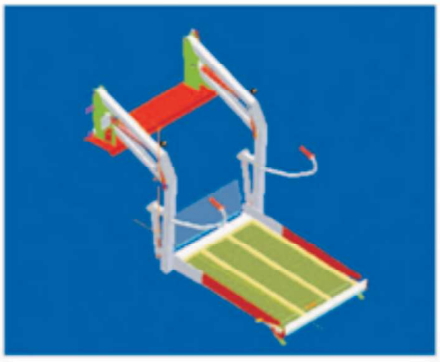


ITEM CODE	WS02 / 001
Outside View	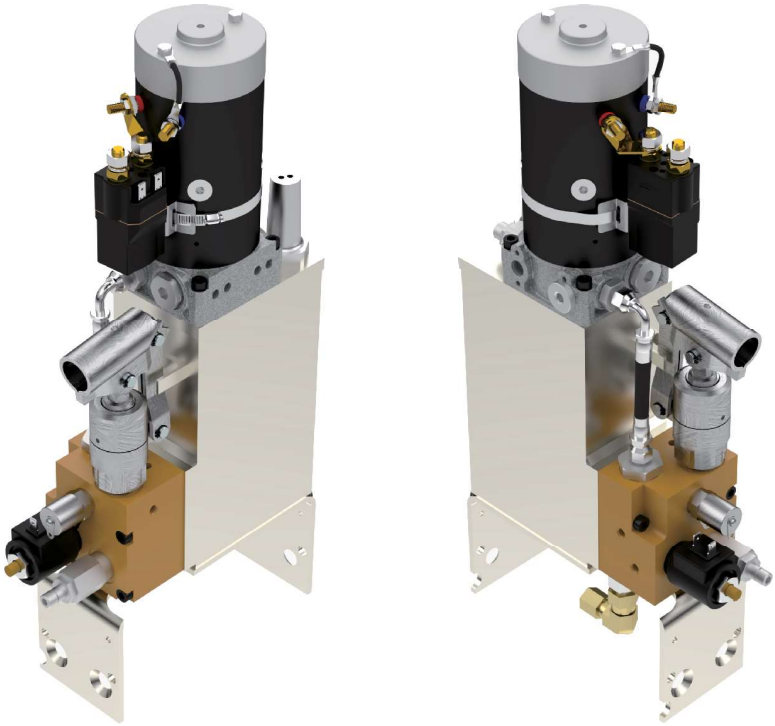
Hydraulic Circuit	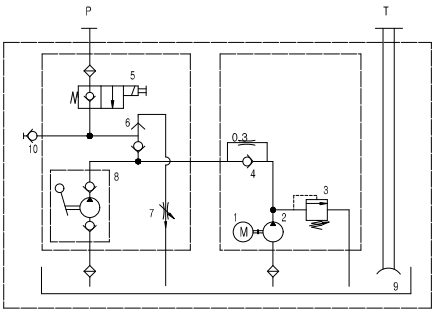

No.	Parts	Specification
1	Motor	0.8kW, 12V
2	Pump	-
3	Relief valve	100 BAR
4	Orifice valve	Φ0.3
5	Solenoid valve & Override valve	DC 12V
6	Shuttle valve	-
7	Speed control valve	-
8	Hand pump	8.2 CC/STROKE
9	Oil tank	1.6L (USE : 1.3L)
10	Test point plug	-

DAU-SERIES PLASTIC POWER PACK

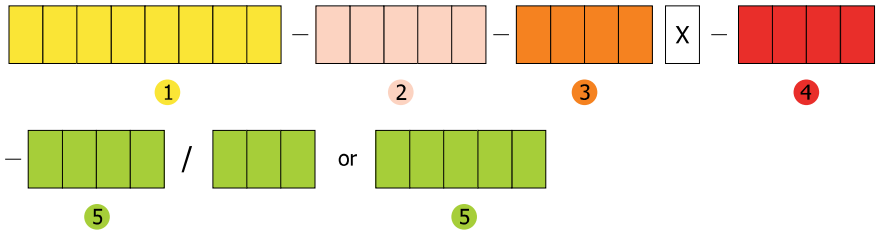

CENTER BLOCK	DAU1

CENTER BLOCK	DAU4

1 M 2 0 8 X 2 X T

A

MOTOR

	ITEM CODE	THERMO SENSOR	VOLTAGE (V)	POWER (W)	RATED CURRENT (A)	DUTY CYCLES S2min-S3%	PICTURE
A	M108X1X	X	12	800	120	1.8min-7%ED	
	M208X2X		24	800	60	1.8min-7%ED	
	M108X1XT	O	12	800	120	1.8min-7%ED	
	M208X2XT		24	800	60	1.8min-7%ED	
	D116X1XB	X	12	1600	209	4min-8%ED	
	D222X2XB		24	2200	110	2min-7.5%ED	
	D116X1XBT	O	12	1600	209	4min-8%ED	
	D222X2XBT		24	2200	110	2min-7.5%ED	

CENTER BLOCK

Relief valve	
Code	Pressure range
A	10 ~ 60 kg.f/cm²
B	50 ~ 150 kg.f/cm²
C	100 ~ 200 kg.f/cm²
D	150 ~ 250 kg.f/cm²
F	50 ~ 120 kg.f/cm² (Flow range 12 LPM ~30 LPM)

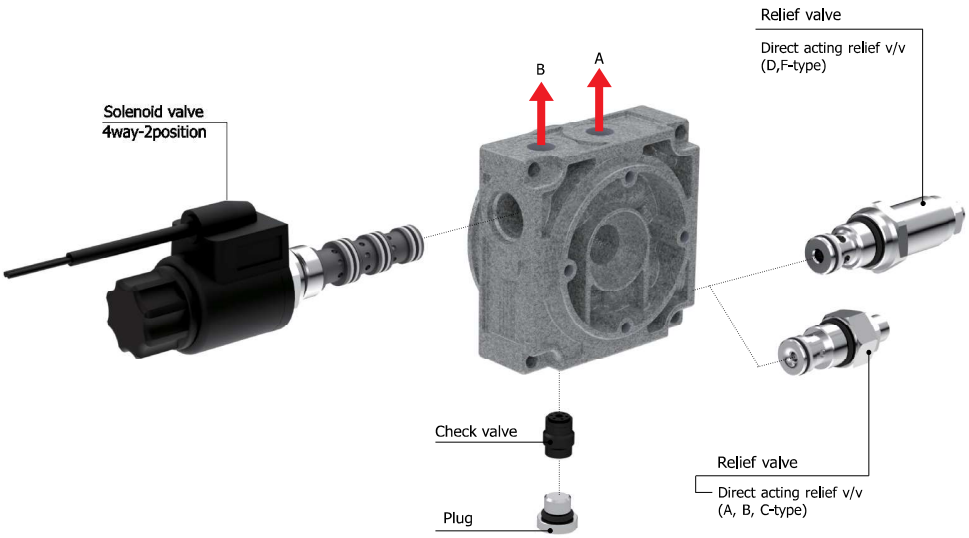

A

DAU1 DIMENSION

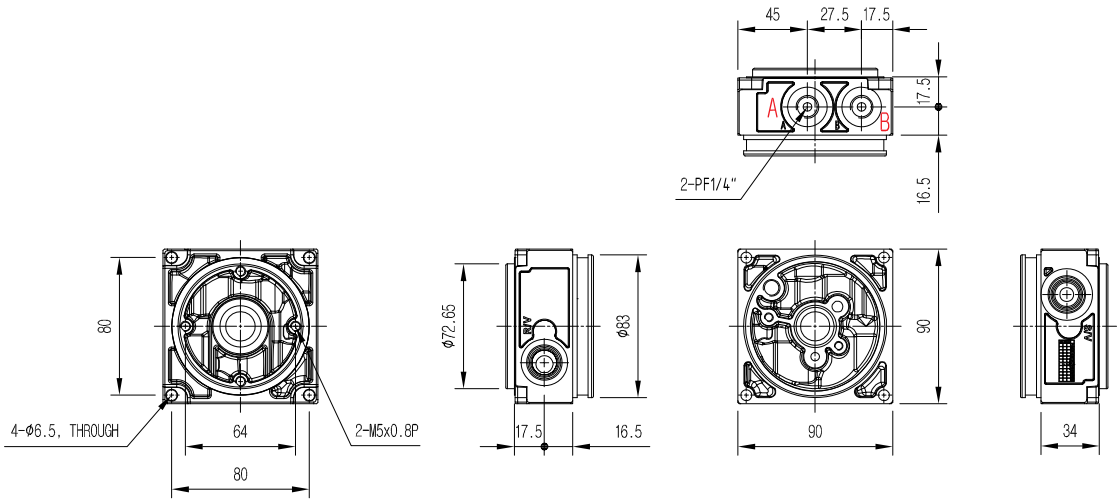

20-Series COIL

*L

Voltage
12V DC, 26W
24V DC, 23W

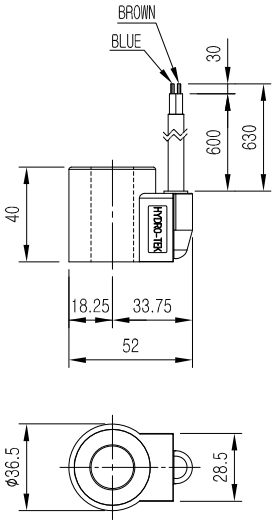

DAU1 & DAU4 CENTER BLOCK SPECIFICATION

DESCRIPTION	MAIN SPECIFICATION
1. Made of Aluminum material 2. Outlet port : DAU1 - PF 1/4" DAU4 - SAE #6_UNF 9/16" 3. Solenoid valve : 4way 2position 4. Pressure adjustable Relief valve 5. Applicable pump displacement : DAU1 - 0.2 cc/rev ~ 1.1 cc/rev DAU4 - 1.1 cc/rev ~ 4.2 cc/rev	a : Check valve = PF 1/4" (HC14-2 Cavity) b : Relief valve = UNF 3/4" (HC09-2 Cavity) c : Solenoid valve = M20x1.5p (HC20-2 & HC20-4 Cavity) d : Orifice = PF 1/4" e : Orifice = M6 x 1P

d :

CODE	FLOW RATE
S01	1 ℓ/min
S02	2 ℓ/min
S03	3 ℓ/min
S04	4 ℓ/min
S06	6 ℓ/min
S08	8 ℓ/min
S10	10 ℓ/min
S12	12 ℓ/min

e :

CODE	HOLE
M08D	⌀0.8
M10D	⌀1.0
M12D	⌀1.2
M13D	⌀1.3
M15D	⌀1.5

A

DAU1

VALVE ASSEMBLY

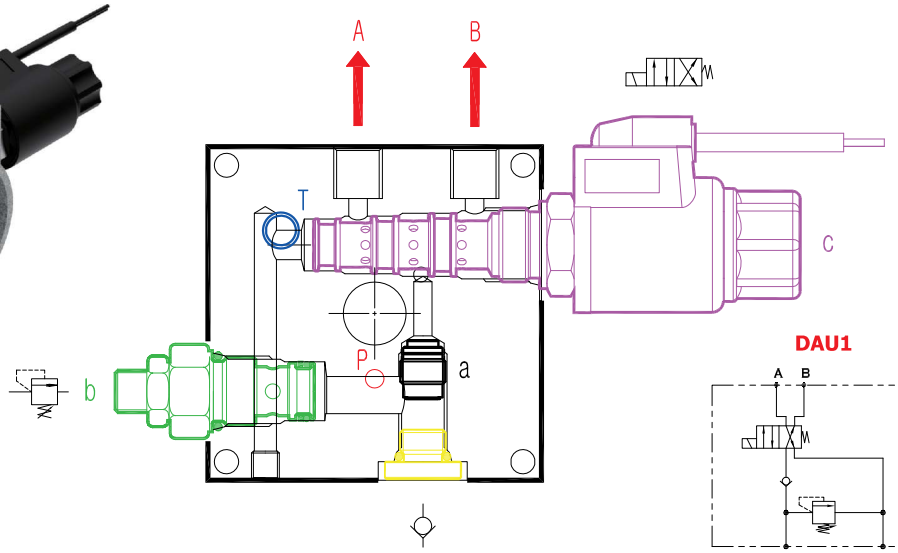

Only use the
GH pump

DAU4

VALVE ASSEMBLY

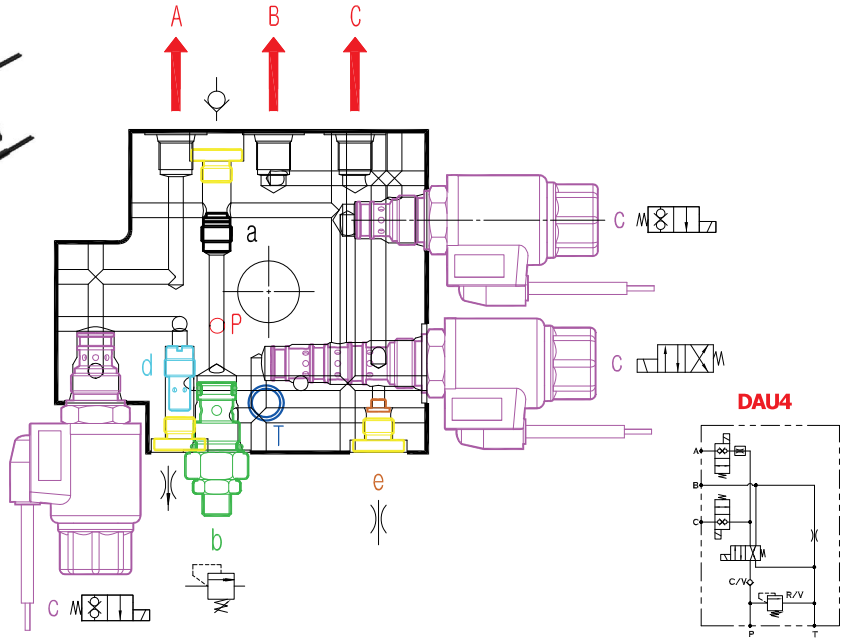

Only use the
GO pump

3 G H 0 7 X

A

PUMP

A	ITEM CODE	Specification			
		Displacement (cc/rev)	Flow (Liter/min @2500 RPM) DC	Max. operating pressure (kg·f/㎠)	Max. peak pressure (kg·f/㎠)
	GH02	0.2	0.5	190	230
	GH03	0.3	0.7	190	230
	GH05	0.5	1.2	190	230
	GH07	0.7	1.7	190	230
	GH11	1.1	2.7	190	230
	Please refer to "Coding No.3" for detail dimension (See page 96)				

A	ITEM CODE	Specification			
		Displacement (cc/rev)	Flow (Liter/min @2500 RPM) DC	Max. operating pressure (kg·f/㎠)	Max. peak pressure (kg·f/㎠)
	GO08	0.8	2.0	230	270
	GO11	1.1	2.7	230	270
	GO13	1.3	3.2	230	270
	GO16	1.6	4.0	230	270
	GO21	2.1	5.2	230	270
	GO23	2.3	5.7	230	270
	GO27	2.7	6.7	230	270
	GO32	3.2	8.0	210	250
	GO37	3.7	9.2	210	250
	GO42	4.2	10.5	210	250

4 H S S D

A

MOUNTING

A	HSSX	HSSD	VSSX
	Horizontal	Horizontal	Vertical
	Without Bracket	With Bracket	Without Bracket
			

5 S S 2 5 / 0 6 5

A

PLASTIC TANK

A	ITEM CODE	SS25 / 065 (DAU1)		ITEM CODE	PDS08 (DAU4)	
	CAPACITY	TANK	4L	CAPACITY	TANK	8.5L
		USABLE	2.5L		USABLE	7.5L
						

6 HP ENGINE PEU

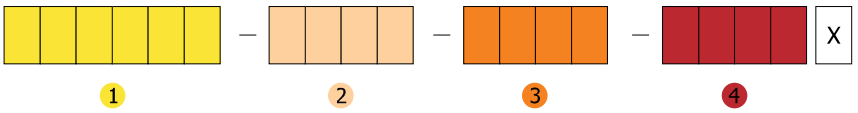

CODING SYSTEM

1 Engine	3 Coupling
2 Flange	4 Pump

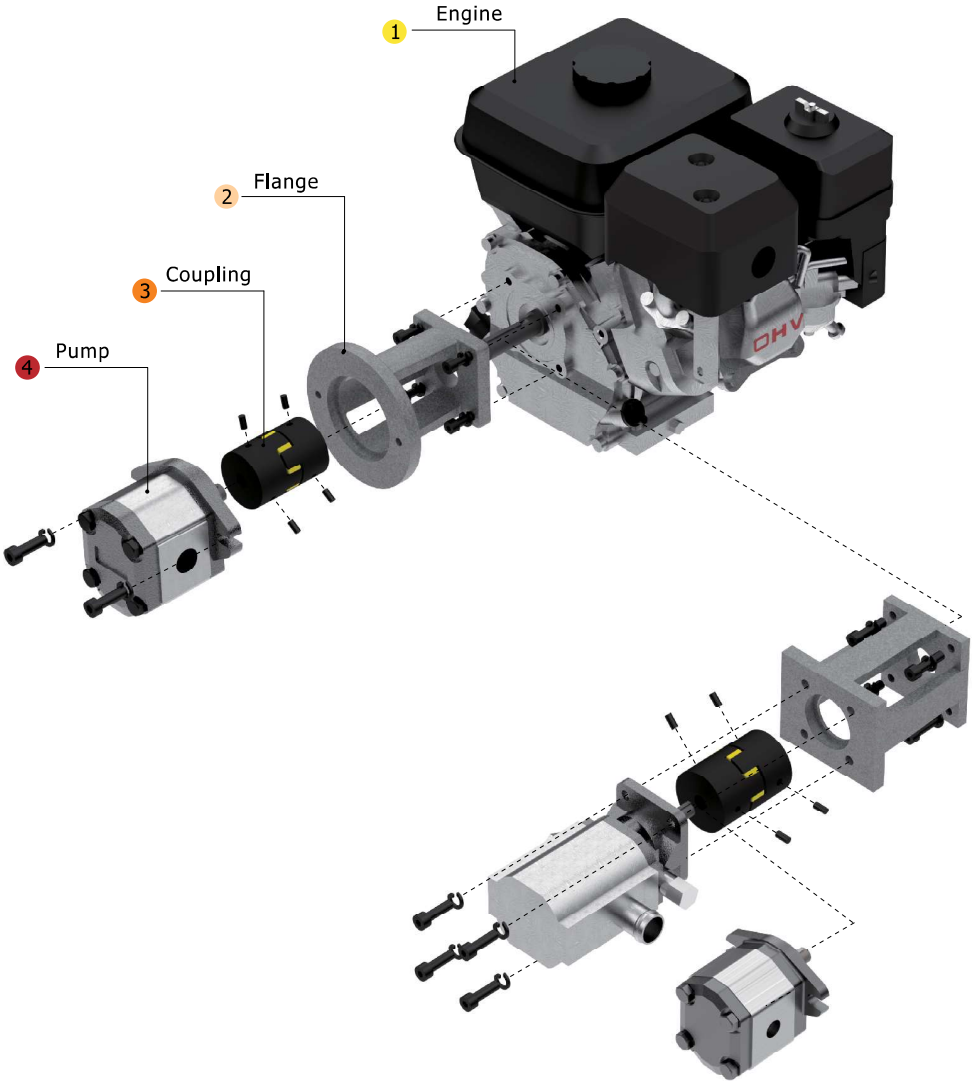

Order coding example

Description :
① ENGINE : 6 HP 212cc Single Cylinder/4-Stroke/Air-Cooled
② FLANGE : EF01, EF02
③ COUPLING : JAW COUPLING EC01, EC02
④ PUMP : G2 Series Gear Pump(EF01), G1 Hi/Low(EF02), G1 Series Gear Pump(EF02)

Example – D H 2 1 2 – E F 0 1 – E C 0 1 – G 2 0 3 X

1 2 3 4

13 HP ENGINE PEU

①	– ②	– ③	– ④	X

CODING SYSTEM

① Engine	③ Coupling
② Flange	④ Pump

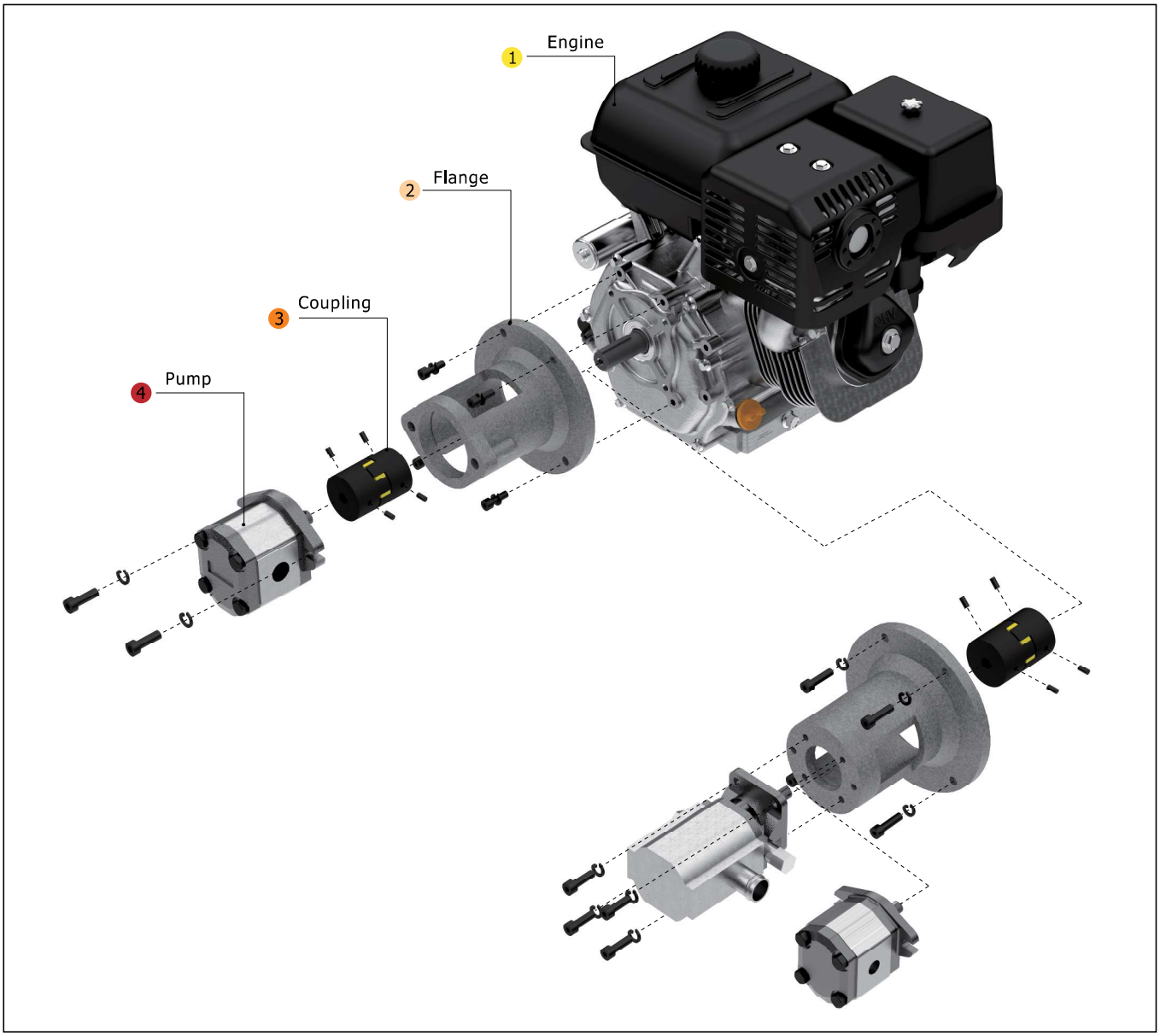

Order coding example

Description :
① ENGINE : 13 HP 420cc Single Cylinder/4-Stroke/Air-Cooled
② FLANGE : EF03, EF04
③ COUPLING : JAW COUPLING EC03, EC04
④ PUMP : G2 Series Gear Pump(EF03), G1 Hi/Low(EF04), G1 Series Gear Pump(EF04)

Example – D H 4 2 0 (①) – E F 0 3 (②) – E C 0 3 (③) – G 2 0 4 (④) X

ITEM CODE	DH212	DH420
Power @3600rpm(HP)	6	13
Power @3600rpm(KW)	4.5	10
Torque @2800rpm(N.m)	13.5	26.5
Displacement(cc)	212	420
Bore & Stroke	70X55	90X66
Fuel Tank(L)	3.6	6.5
Dry Weight(kg)	14.7/16.7	31/33
Oil Capacity(L)	0.6	1.1

6.5 HP DIMENSION

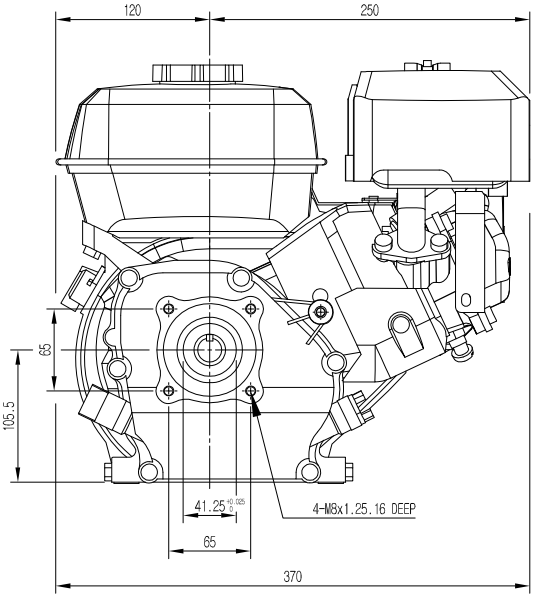

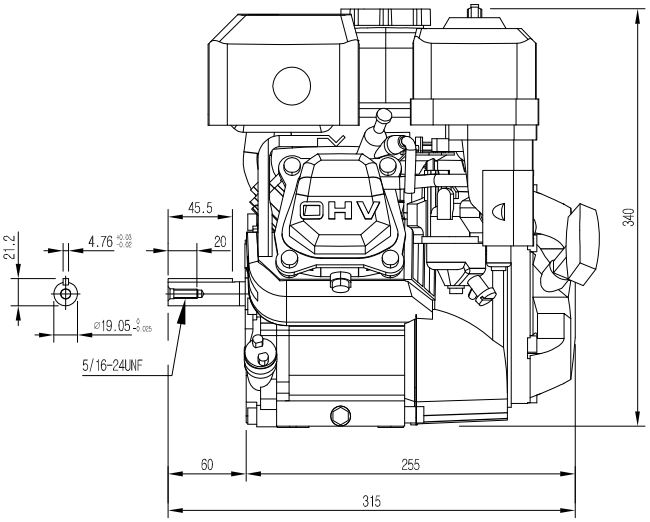

13 HP DIMENSION

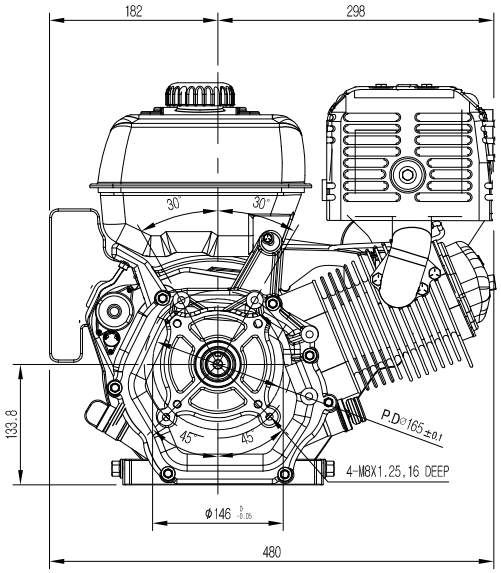

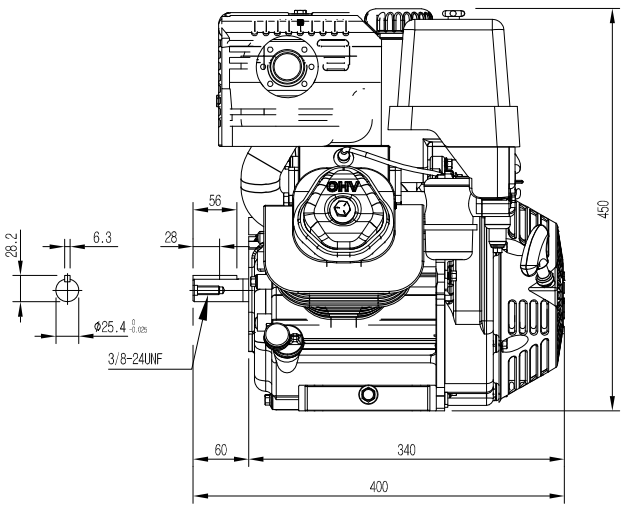

2 E F 0 1 — 6 HP FLANGE

DIMENSION

EF01

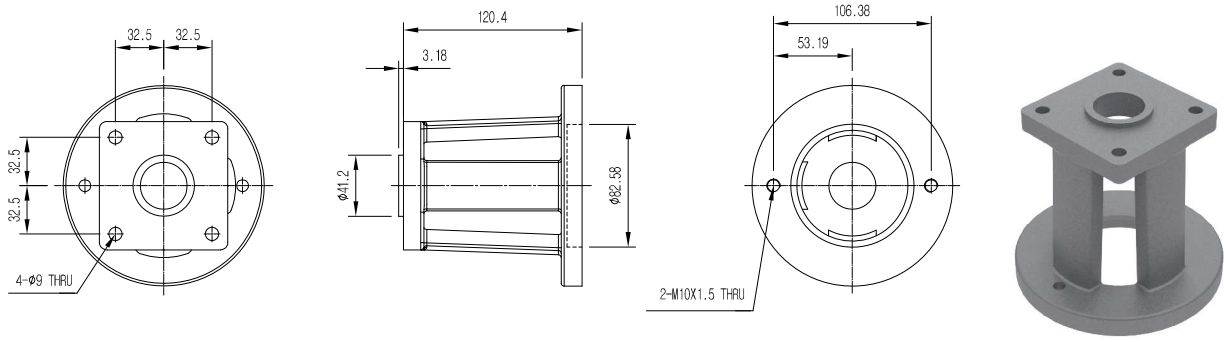

EF02

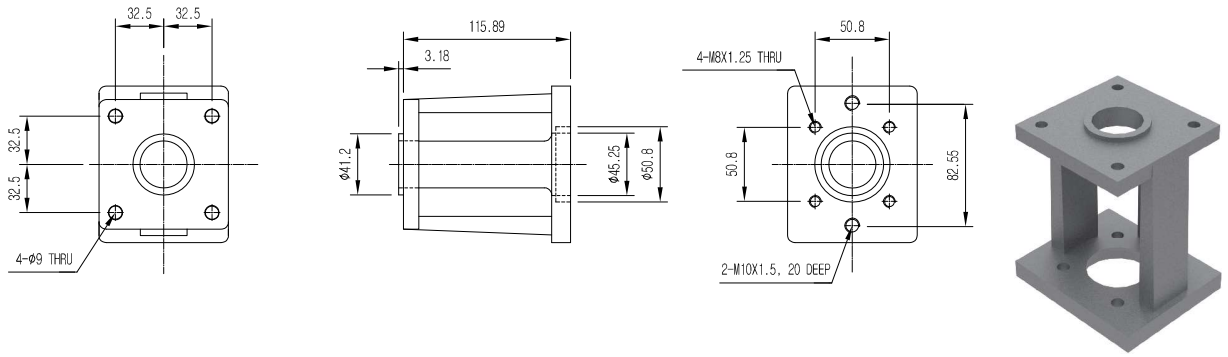

3 E C 0 1 — 6 HP COUPLING

DIMENSION

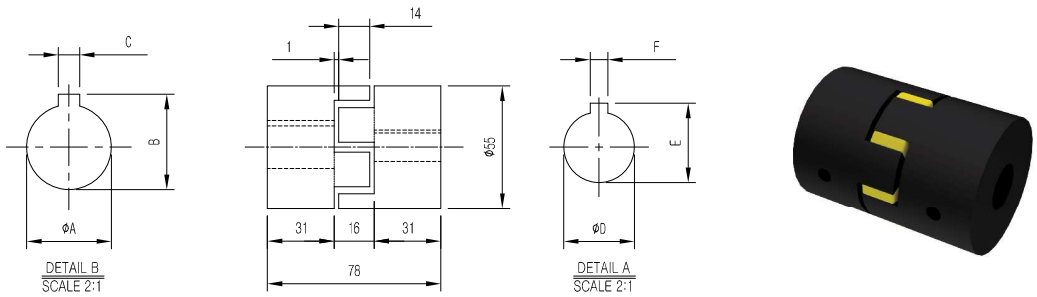

ITEM CODE	ENGING				PUMP			
	A	B	C	APPLICABLE ENGINE	D	E	F	APPLICABLE PUMP
EC01	19.05	21.4	4.76	5.2HP	15.88	17.8	3.97	G2 GROUP PUMP
EC02	19.05	21.4	4.76	5.2HP	12.7	14.2	3.18	HI/LOW GROUP PUMP
								G1 GROUP PUMP

2 E F 0 3 — 13 HP FLANGE

DIMENSION

EF03

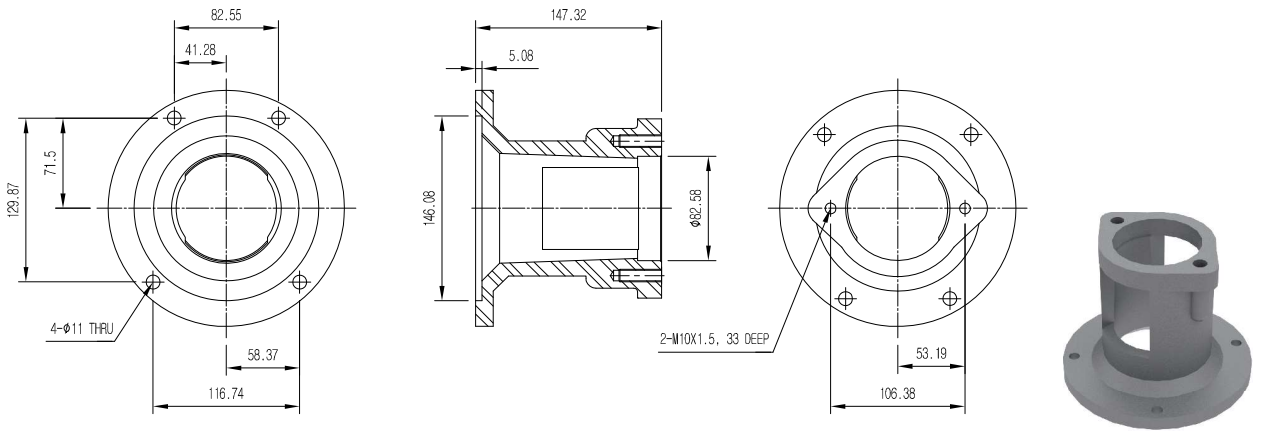

EF04

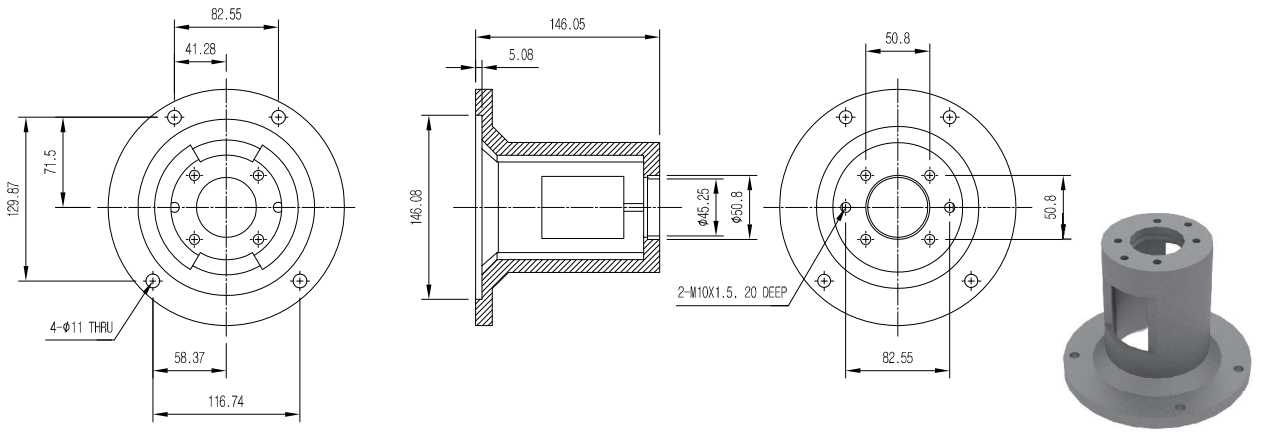

3 E C 0 3 — 13 HP COUPLING

DIMENSION

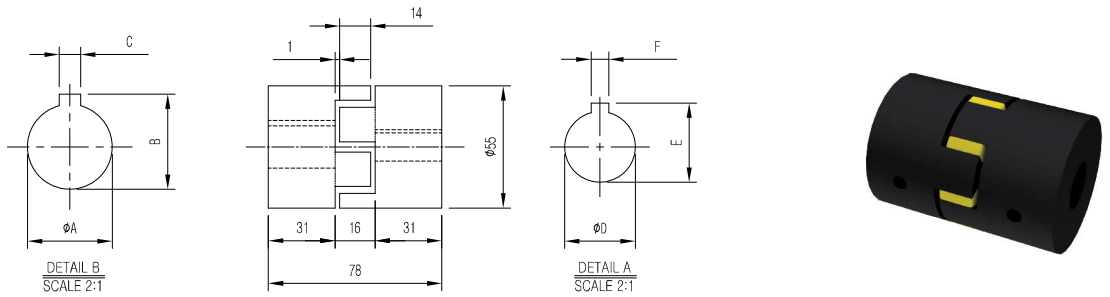

ITEM CODE	ENGING				PUMP			
	A	B	C	APPLICABLE ENGINE	D	E	F	APPLICABLE PUMP
EC03	25.4	28.3	6.3	11.5HP	15.88	17.8	3.97	G2 GROUP PUMP
EC04	25.4	28.3	6.3	11.5HP	12.7	14.2	3.18	HI/LOW GROUP PUMP
								G1 GROUP PUMP

GEAR PUMP

- "D" and "d" ports are machined in compliance with threaded port with O-ring seal in truncated housing SAE J1926/1(ISO J1926-1).
- To mount the pump, 4-M8 screws, with a torque wrench setting fixed at 30±3 Nm.

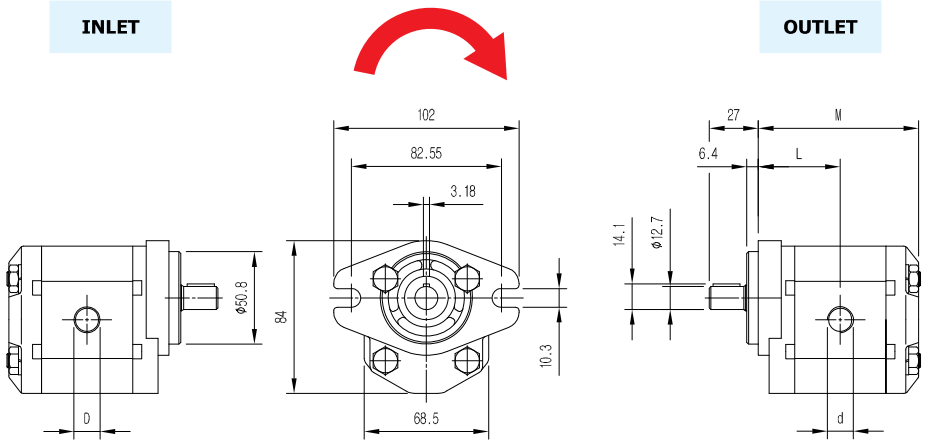

Rotation: CW

P1= CONTINUOUS MAX. PRESSURE
P2= INTERMITTENT MAX. PRESSURE
P3= PEAK MAX. PRESSURE

ITEM CODE	Displacement	Max. Pressure			Max. Speed	Min. speed	Dimensions			
		P1	P2	P3			M	L	D	d
	cm³/rev	bar	bar	bar	rpm	rpm	mm	mm	mm	mm
G114	1.4	250	270	290	6000	800	82.5	42	PT1/2	PT3/8
G121	2.1	250	270	290	6000	800	54.5	43	PT1/2	PT3/8
G128	2.8	250	270	290	5000	800	86.5	44	PT1/2	PT3/8
G135	3.5	250	270	290	5000	800	88.5	45	PT1/2	PT3/8
G141	4.1	250	270	290	4000	800	90.5	46	PT1/2	PT3/8
G152	5.2	230	2245	260	4000	800	93.5	47.5	PT1/2	PT3/8
G162	6.2	230	245	260	3500	800	96.5	49	PT1/2	PT3/8
G176	7.6	200	215	230	3000	600	100.5	51	PT3/4	PT1/2
G193	9.3	180	195	210	2500	600	105.5	53.5	PT3/4	PT1/2
G1A1	11.0	170	185	200	2500	600	110.5	56	PT3/4	PT1/2
G1A3	13.8	150	165	180	2000	600	118.5	60	PT3/4	PT1/2

GEAR PUMP

- "D" and "d" ports are machined in compliance with threaded port with O-ring seal in truncated housing SAE J1926/1(ISO J1926-1).

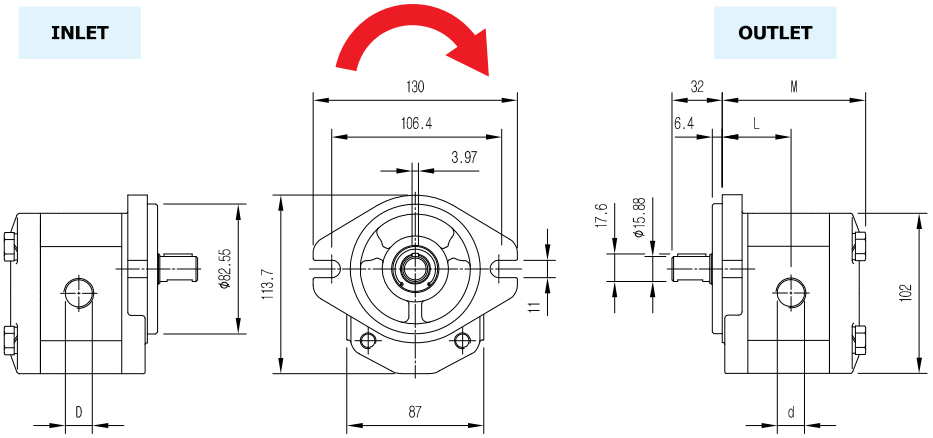

Rotation: CW

P1= CONTINUOUS MAX. PRESSURE
P2= INTERMITTENT MAX. PRESSURE
P3= PEAK MAX. PRESSURE

ITEM CODE	Displacement	Max. Pressure			Max. Speed	Min. speed	Dimensions			
		P1	P2	P3			M	L	D	d
	cm³/rev	bar	bar	bar	rpm	rpm	mm	mm	mm	mm
G203	3	270	285	300	4000	800	91.1	43.6	PT1/2	PT1/2
G204	4	270	285	300	4000	600	92.7	44.4	PT1/2	PT1/2
G206	6	270	285	300	4000	500	96	46	PT1/2	PT1/2
G208	8	270	285	300	3500	500	99.3	47.7	PT1/2	PT1/2
G210	10	270	285	300	3000	500	102.6	49.3	PT1/2	PT1/2
G212	12	270	285	300	3000	500	105.9	51	PT1/2	PT1/2
G214	14	250	265	280	4000	500	109.3	52.7	PT3/4	PT1/2
G216	16	250	265	280	4000	400	112.7	54.4	PT3/4	PT1/2
G218	18	250	265	280	3600	400	116	56	PT3/4	PT1/2
G220	20	220	235	250	3200	400	119.3	57.7	PT3/4	PT1/2
G222	22	220	235	250	3000	400	122.6	59.3	PT3/4	PT1/2
G225	25	200	215	230	3000	400	127.6	61.8	PT3/4	PT1/2
G228	28	180	190	200	2500	400	132.6	64.3	PT3/4	PT1/2
G230	30	160	170	180	2500	400	135.9	66	PT3/4	PT1/2

4	G	1	X	X	G	1	X	X	X
	A /	B /	C	/ A /	B /	C	/	Brand	

HI/LOW GEAR PUMP

- This gear pump consists of a big displacement, low pressure pump and a small displacement, high pressure pump, a check valve as well as a relif valve. When working at the higher pressure only small pump outputs flow, which highly reduces the power consumption.

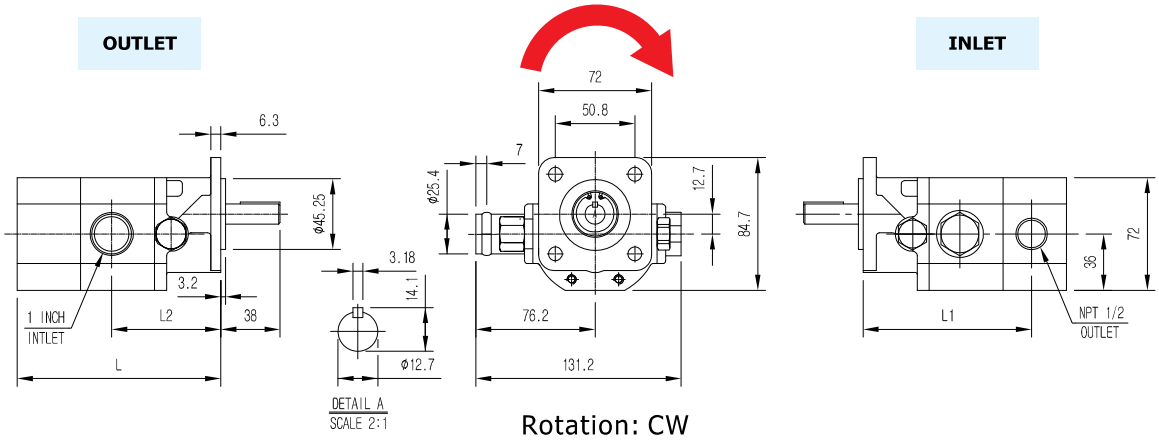

ITEM CODE	Displacement		Flow	Pressure (bar)		Speed	Dimensions		
							L	L1	L2
	Hi Pre	Low Pre	L/min	Unload	Work	RPM	mm	mm	mm
G163G121	2.1	6.3	30	Range : 28~63 Preset : 45	210	3600	154.2	95.2	61.2
G136G130	3.0	6.3	33.5				157.8	95.2	61.2
G163G136	3.6	6.3	35.5				159.9	99.6	61.6
G188G116	1.6	8.8	37.4				162	103.6	69.6
G188G122	2.2	8.8	39				162.7	103.6	69.6
G188G130	3.0	8.8	42				166.2	103.6	69.6
G188G136	3.6	8.8	44				167.9	107.6	69.6
G188G142	4.2	8.8	46				170.2	109.9	69.6
G1A1G121	2.1	10.9	46				170.2	109.9	77.1
G1A1G130	3.0	10.9	50				173.7	113.4	77.1
G1A1G136	3.6	10.9	50				175.4	115.1	77.1
G1A1G142	4.2	10.9	52				177.7	117.4	77.1
G1A3G130	3.0	13.0	58				180.7	122.1	84.1
G1A3G142	4.2	13.0	62				184.7	122.1	84.1

6 HP ENGINE PACK

				–			–		–					–								
									X	X												
1					2			3				4						5				

CODING SYSTEM

1 Engine	4 Pump
2 Flange and Coupling Holder & coupling	5 Tank
3 Center Block	

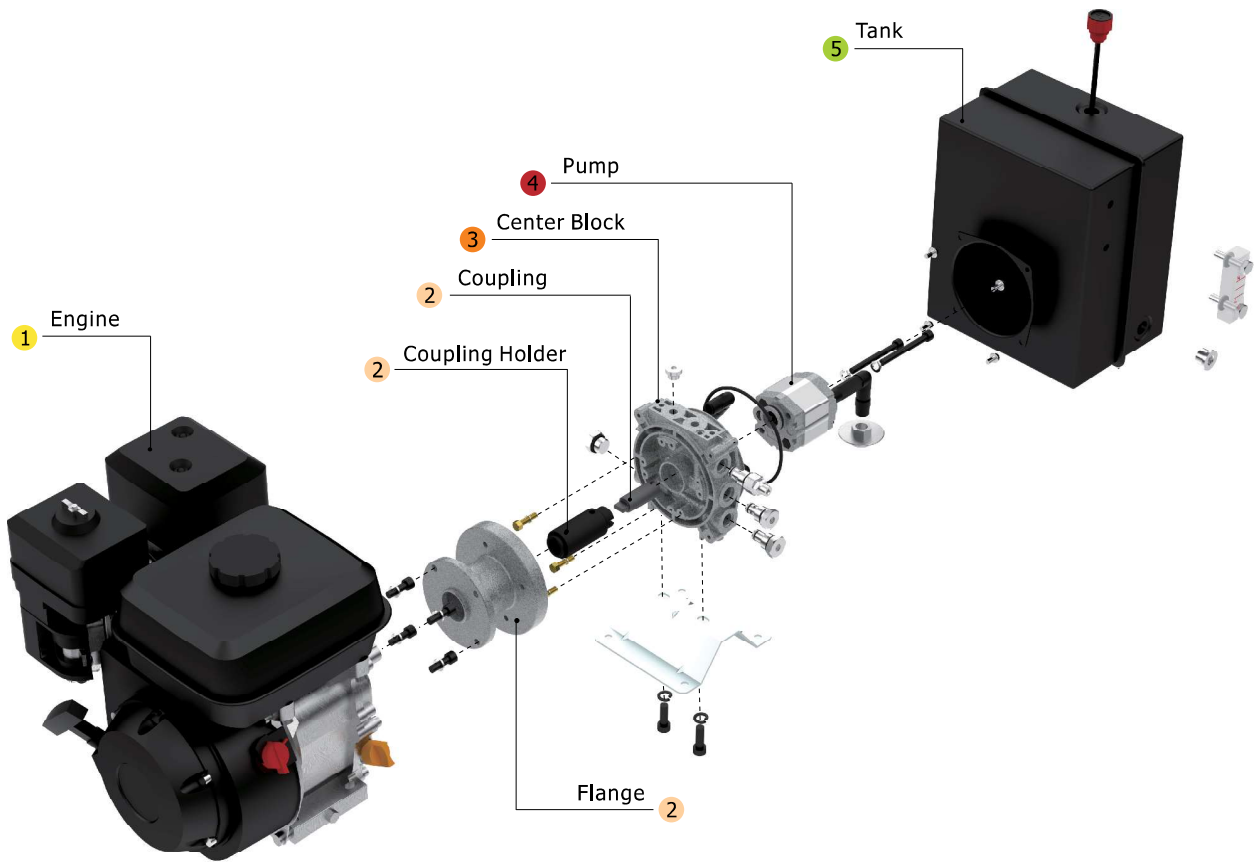

Order coding example

Description :
① ENGINE: 6 HP 212cc Single Cylinder/4-Stroke/Air-Cooled
② FLANGE AND COUPLING HOLDER & COUPLING
③ CENTER BLOCK : Series-X, Digram No.1 type, Relief Valve 200kgf/㎠, CW
④ PUMP : One Group Gear Pump-2.7cc/rev CW
⑤ TANK: Series-X Type 12Liter

Example – D H 2 1 2 – E X 2 1 – X A 1 C / R – G 0 2 7 X R – X S 1 2

1 2 3 4 5

13 HP ENGINE PACK

				–				–		
										–
									X	X
1				2				3		4				5

CODING SYSTEM

1 Engine	4 Pump
2 Flange and Coupling Holder & coupling	5 Tank
3 Center Block	

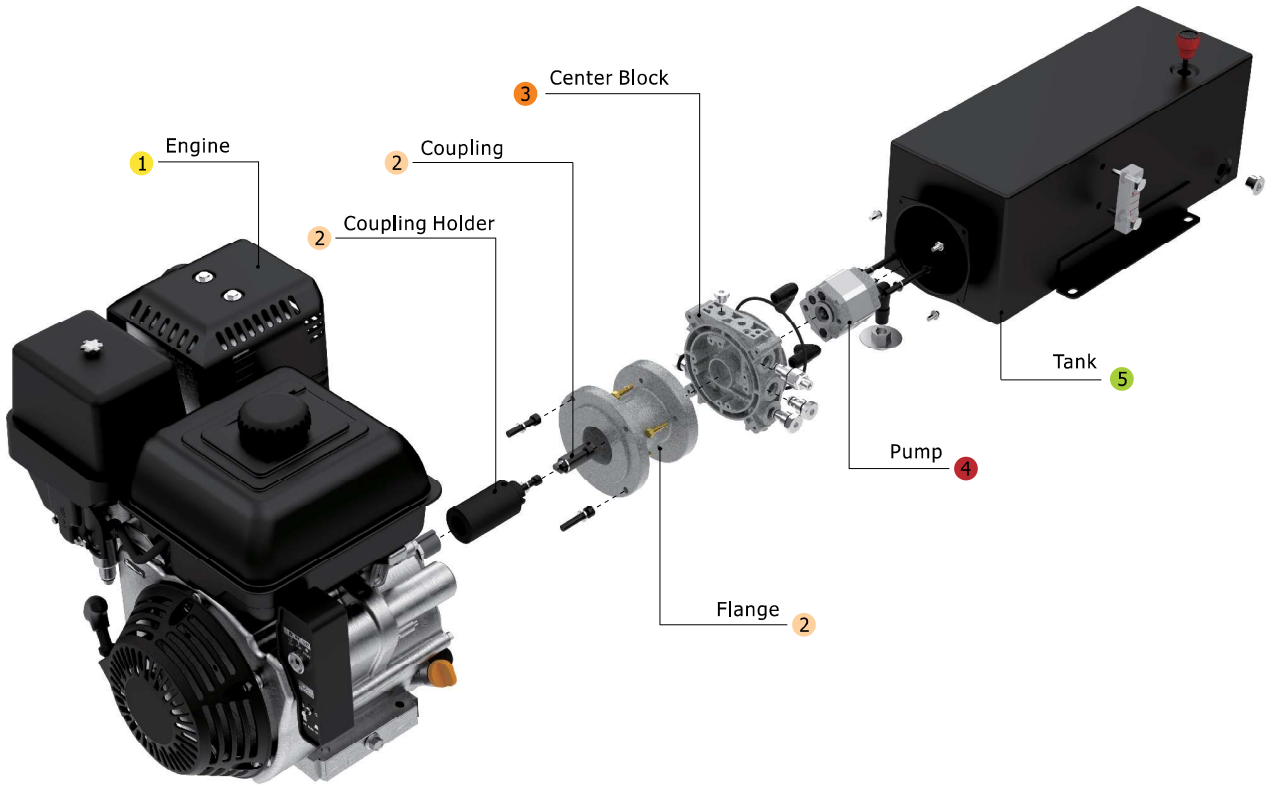

Order coding example

Description :
① ENGINE: 13 HP 420cc Single Cylinder/4-Stroke/Air-Cooled
② FLANGE AND COUPLING HOLDER & COUPLING
③ CENTER BLOCK : Series-X, Digram No.1 type, Relief Valve 200kgf/㎠, **CW**
④ PUMP : One Group Gear Pump-2.7cc/rev CW
⑤ TANK: Series-X Type 20Liter

Example – D H 4 2 0 – E X 2 7 – X A 1 C / R – G 0 2 7 X R – X S 2 0

1 2 3 4 5

FLANGE

DIMENSION

EX21(6 HP)

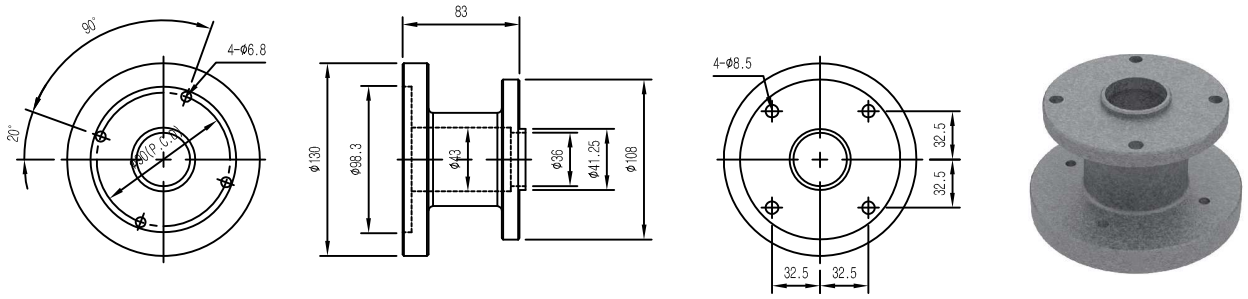

EX27(13 HP)

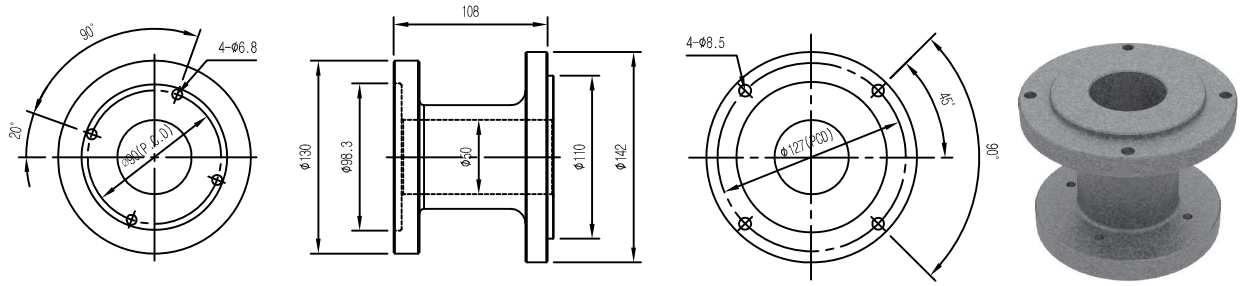

COUPLING HOLDER & COUPLING

DIMENSION

EX21(6 HP) COUPLING HOLDER

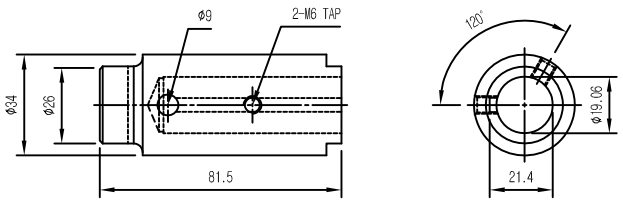

EX27(13 HP) COUPLING HOLDER

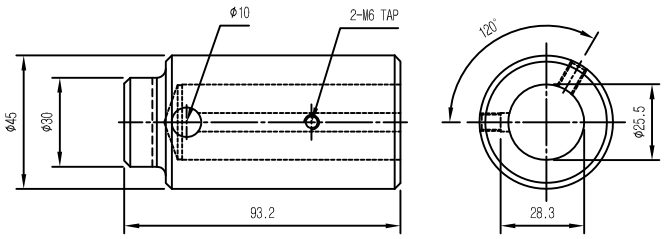

COUPLING

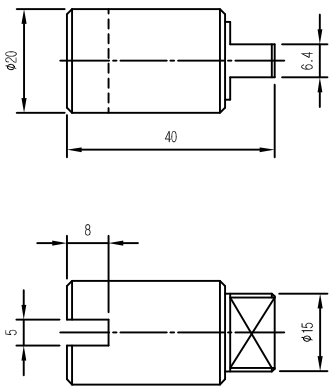

ENGINE PACK

X CENTER BLOCK SPECIFICATION

DESCRIPTION	MAIN SPECIFICATION
1. Made of Aluminum material 2. Outlet port = PF 1/4" (Options : PT1/4", PF3/8", PT3/8", SAE6) 3. Return port = PF 1/4" (Options : PT1/4", PF3/8", PT3/8", SAE6) P2 : Secondary Work Port = PF1/4" 4. Solenoid valve : Normally closed, Normally open, Double lock selectional 5. Pressure adjustable Relief valve 6. Applicable pump displacement : 0.2 cc/rev ~ 9.8 cc/rev 7. Only "X" series oil tank applicable (refer to page 91 for X series oil tank)	a : Check valve = UNF 3/4" (HC08-2 Cavity) Hydro-tek has two different ·One : Check function only ·Two : Check function & P2 Port b : Relief valve = UNF 3/4" (HC08-2 Cavity) c : Solenoid valve = UNF 3/4" (HC08-2 Cavity) d : Orifice = (HC08-2F Cavity) e : GA = UNF 3/4" (HC08-2 Cavity) f : Lever valve = UNF 3/4" (HC08-2 Cavity) P : Primary Work Port = PF 1/4" P2 : Secondary Work Port = PF 1/4" T : Return Port = PF 1/4"

A

XA1 & XB1

VALVE ASSEMBLY

XA1

XB1

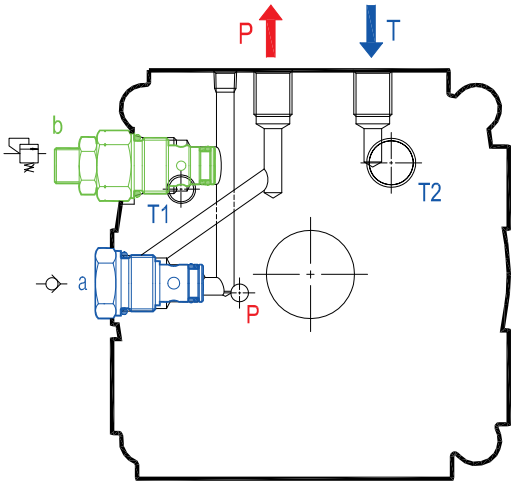

XA1 / XB1

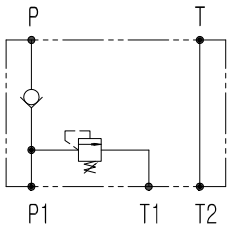

XA1/F14F & XB1/F14F

VALVE ASSEMBLY

XA1/F14F

XB1/F14F

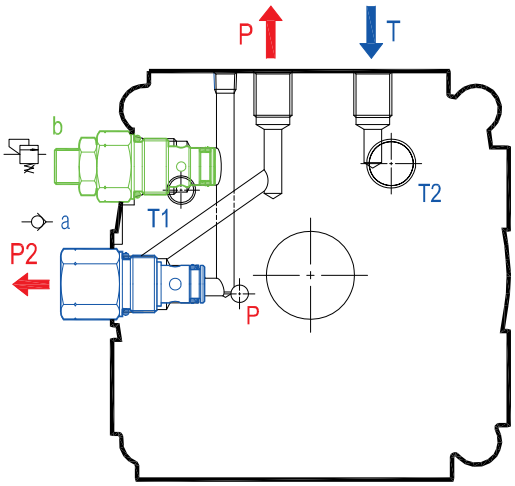

XA1/F14F / XB1/F14F

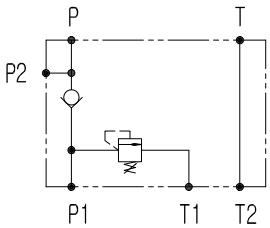

A

XA3 & XB3

VALVE ASSEMBLY

XA3

XB3

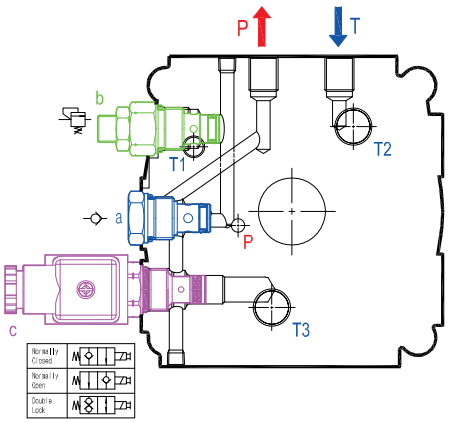

XA3 / XB3

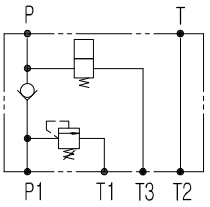

XA3/F14F & XB3/F14F

VALVE ASSEMBLY

XA3/F14F

XB3/F14F

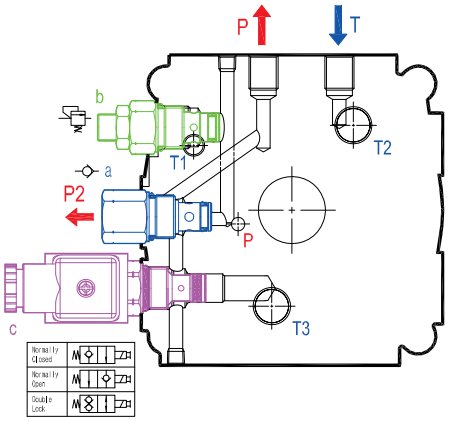

XA3/F14F / XB3/F14F

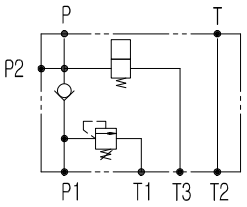

XA5 & XB5

VALVE ASSEMBLY

XA5

XB5

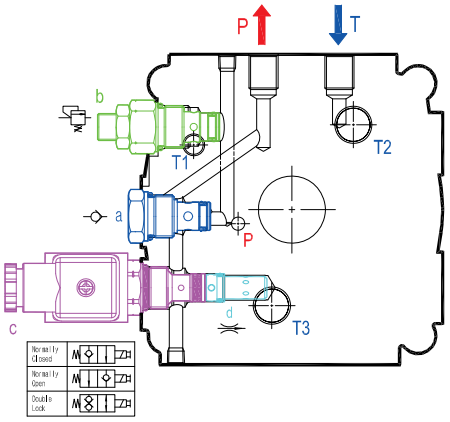

XA5 / XB5

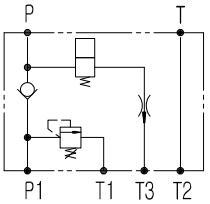

VALVE ASSEMBLY

XA5/F14F

XB5/F14F

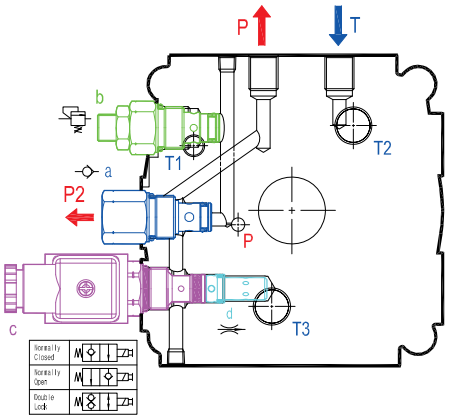

XA5/F14F / XB5/F14F

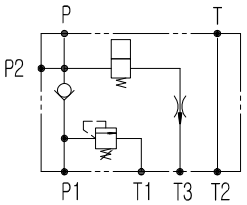

GEAR PUMP

-End cover : G3/8 thread depth 12.

-To mount the pump, 2-M8 screws, with a torque wrench setting fixed at 27±3 Nm.

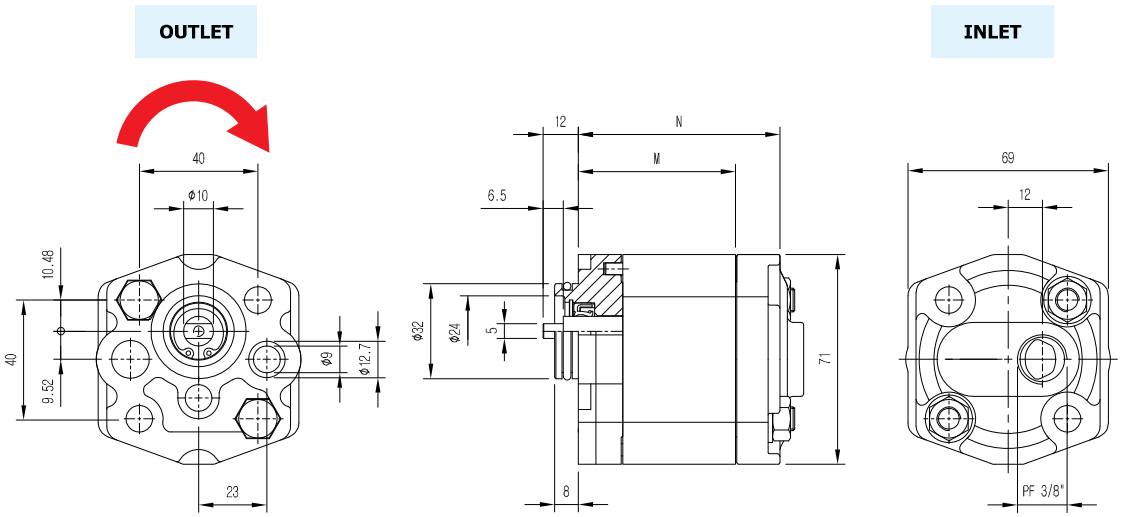

Rotation: CW

P1= CONTINUOUS MAX. PRESSURE
P2= INTERMITTENT MAX. PRESSURE
P3= PEAK MAX. PRESSURE

ITEM CODE	Displacement	Max. Pressure			Max. Speed	Min. speed	Dimensions	
	C	P1	P2	P3			M	N
	cc/rev	bar	bar	bar	rpm	rpm	mm	mm
GO08	0.8	230	250	270	6000	1000	73.5	61.5
GO11	1.1	230	250	270	6000	1000	74	62
GO13	1.3	230	250	270	6000	1000	75	63
GO16	1.6	230	250	270	6000	1000	76	64
GO21	2.1	230	250	270	6000	1000	78	66
GO23	2.3	230	250	270	6000	1000	79	67
GO27	2.7	230	250	270	6000	800	80	68
GO32	3.2	210	230	250	5000	800	82	70
GO37	3.7	210	230	250	4500	800	84	72
GO42	4.2	210	230	250	4000	800	86	74
GO48	4.8	190	210	230	3500	600	88	76
GO58	5.8	190	210	230	3000	600	92	80
GO70	7.0	160	180	200	2500	600	96	84
GO80	8.0	160	180	200	2100	600	100	88
GO98	9.8	160	180	200	2000	600	106.5	94.5

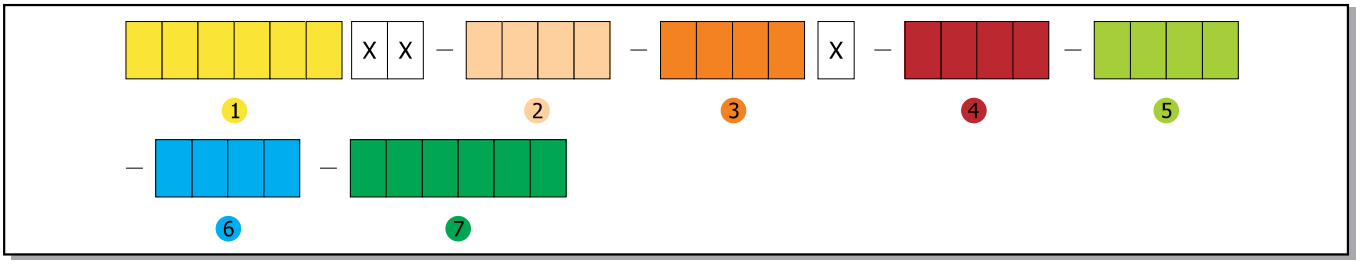

CODING SYSTEM

1 Motor	5 Tank
2 Center Block	6 Built in Valve
3 Pump	7 Directional Valve
4 Mounting	

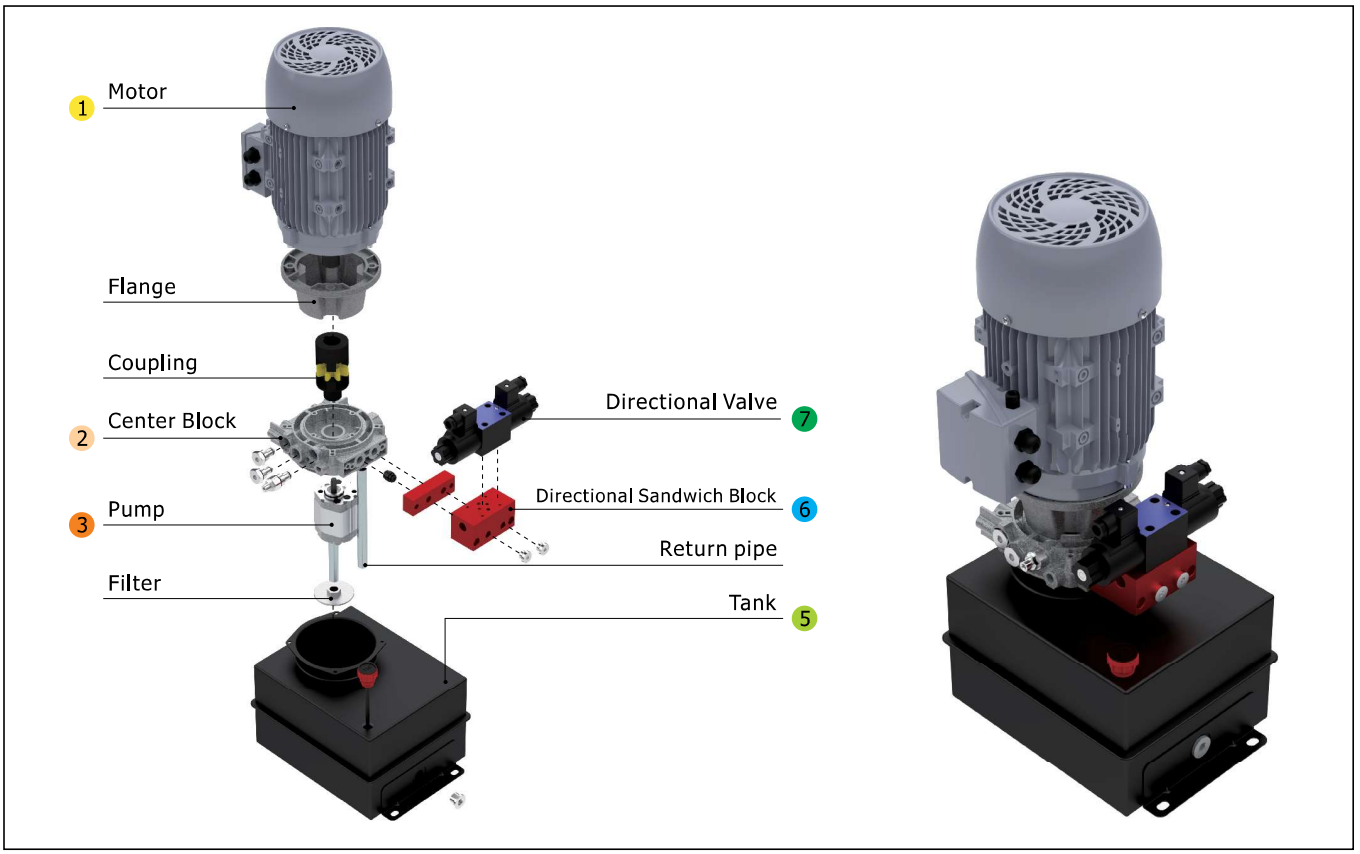

Order coding example

Description :
① Motor Part: 3Phase 3.0kw 50/60Hz CW
② Center Block: Series-J, No1 type, Relief valve 120kgf/㎠
③ Pump: Gear Pump One Group, CCW, 8.0cc/rev
④ Mounting: Refer to 90 Page
⑤ Tank: J-Center Block Square type
⑥ Built in Valve: Directional Sandwich Block
⑦ Directional Valve

Example – T 4 3 0 5 6 X X – J A 1 D – G O 8 0 X J – V M M X – M S 1 2 – B H 3 1 – Y A 4 1 1 D

(1: T 4 3 0 5 6; 2: J A 1 D; 3: G O 8 0; 4: V M M X; 5: M S 1 2; 6: B H 3 1; 7: Y A 4 1 1 D)

TECHNICAL DATA

0.75kw

ITEM CODE (4 POLE)	A		B	C	D	RATED CURRENT (A)	WEIGHT (kg)
	PHASE	VOLTAGE (V)	POLE	POWER (W)	FREQUENCY (Hz)		
S40760	1Φ	220	4	0.75	60	4.76	11.6
R.P.M	INSULATION CLASS	PROTECTION GRADE	EFFICENCY	DUTY CYCLE	FRAME SIZE	DESIGN	ROTATION
1670	B	IP 54	71.8%	S1	80	HD	← C.C.W

TECHNICAL DATA

1.5kw

ITEM CODE (4 POLE)	A		B	C	D	RATED CURRENT (A)	WEIGHT (kg)
	PHASE	VOLTAGE (V)	POLE	POWER (W)	FREQUENCY (Hz)		
S41560	1Φ	220	4	1.5	60	8.7	18
R.P.M	INSULATION CLASS	PROTECTION GRADE	EFFICENCY	DUTY CYCLE	FRAME SIZE	DESIGN	ROTATION
1670	B	IP 54	78%	S1	90	HD	← C.C.W

MOUNTING DIMENSION

1Phase C-Face(B14) Standard Type

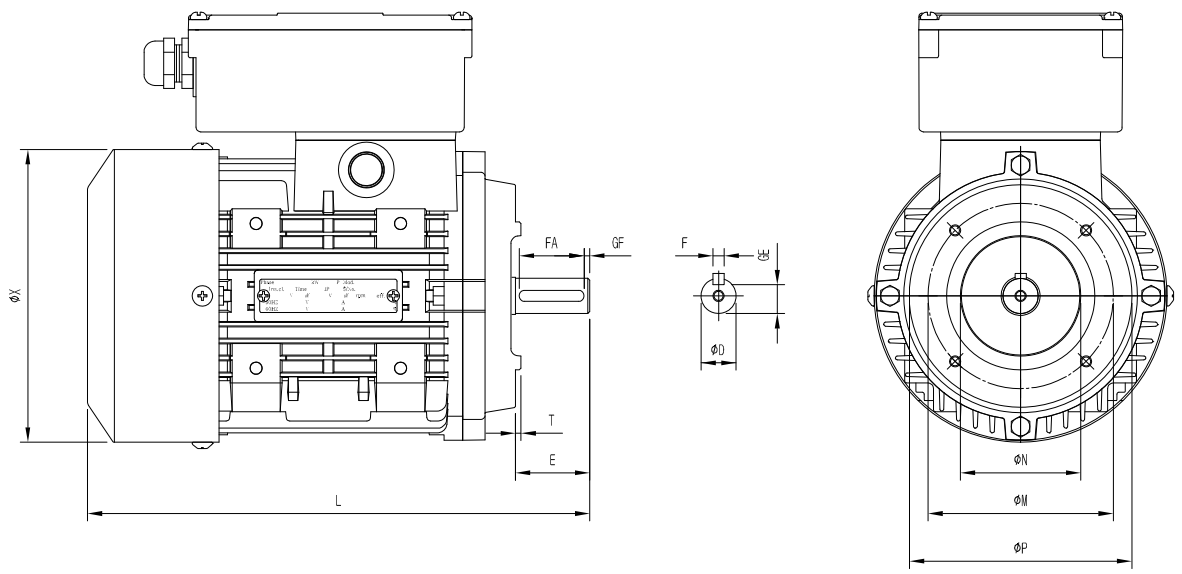

TECHNICAL DATA

FRAME NO.	OUTPUT			DIMENSIONS (mm)															BEARING	
	2P	4P	6P	HOLE			D	E	F	FA	GE	GF	HA	X	L	N	P	T	DE	ODE
				M	TAP	NO														
80M		0.75		100	M6	4	19	40	6	30	3.5	3	223	158	270	80	122	3	6204	6203
90L		1.5		115	M8	4	24	50	8	40	4	3	241	176	306	95	138	3	6205	6204

TECHNICAL DATA

0.75kw

ITEM CODE (4 POLE)	A		B	C	D	RATED CURRENT (A)	WEIGHT (kg)
	PHASE	VOLTAGE (V)	POLE	POWER (W)	FREQUENCY (Hz)		
T40756	3Φ	230 /400	4	0.75	50 / 60	3.50	7.6

R.P.M	INSULATION CLASS	PROTECTION GRADE	EFFICENCY	DUTY CYCLE		FRAME SIZE	DESIGN	ROTATION
1650	F	IP 55	70%	S1	S2	80	HD	◄ C.C.W

TECHNICAL DATA

1.5kw

ITEM CODE (4 POLE)	A		B	C	D	RATED CURRENT (A)	WEIGHT (kg)
	PHASE	VOLTAGE (V)	POLE	POWER (W)	FREQUENCY (Hz)		
T41556	3Φ	230 / 400	4	1.5	50 / 60	6.23	13.8

R.P.M	INSULATION CLASS	PROTECTION GRADE	EFFICENCY	DUTY CYCLE		FRAME SIZE	DESIGN	ROTATION
1670	F	IP 55	55%	S1	S2	90	HD	◄ C.C.W

MOUNTING DIMENSION

3Phase C-Face(B14) Standard Type

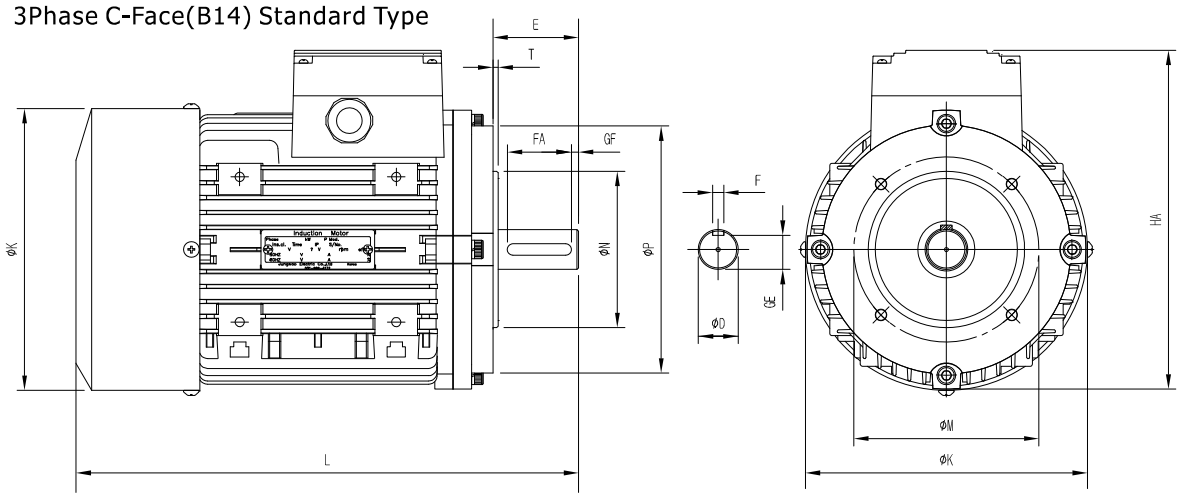

TECHNICAL DATA

FRAME NO.	OUTPUT			DIMENSIONS (mm)															INS CLASS	BEARING	
	2P	4P	6P	HOLE			ΦD	E	F	FA	GE	GF	HA	ΦK	L	ΦN	P	T		DE	ODE
				ΦM	TAP	NO															
71M	0.4	0.4		85	M6	4	14	30	5	20	11	3	177	140	214	70	121	2.5	B	6203	6202
	0.55			85	M6	4	14	30	5	20	11	3	177	140	214	70	121	2.5	B	6203	6202
80M	0.75	0.55	0.4	85	M5	4	19	30	5	20	15.5	3	193	158	259	80	132	3	B	6204	6203
	0.9	0.75		85	M5	4	19	30	5	20	15.5	3	193	158	259	80	132	3	B	6204	6203
	1.1	0.9		100	M6	4	19	40	6	30	15.5	3	193	158	259	80	132	3	B	6204	6203
90L	1.5	1.1	0.75	115	M8	4	24	50	8	40	20	3	211	176	292	95	138	3	B	6205	6204
	1.8	1.5		115	M8	4	24	50	8	40	20	3	211	176	292	95	138	3	B	6205	6204
	2.2	1.8		115	M8	4	24	50	8	40	20	3	211	176	292	95	138	3	B	6205	6204
100L		2.2	1.5	130	M8	4	28	60	8	45	24	5	239	198	353	110	175	3.5	B	6206	6205
	3.0	3.0	2.2	130	M8	4	28	60	8	45	24	5	239	198	353	110	175	3.5	B	6206	6205
	4.0	4.0		130	M8	4	28	60	8	45	24	5	239	198	353	110	175	3.5	B	6206	6205

TECHNICAL DATA

3.0 kw

ITEM CODE (4POLE)	A		B	C	D	RATED CURRENT (A)	WEIGHT (kg)
	PHASE	VOLTAGE (V)	POLE	POWER (kw)	FREQUENCY (Hz)		
T43056	3Φ	230/400	4	3.0	50/60	****	****
F43056		254/440				****	****

R.P.M	INSULATION CLASS	PROTECTION GRADE	EFFICIENCY	DUTY CYCLE		FRAME SIZE	DESIGN	ROTATION
1700	F	IP 55	80%	S1	S2	100	B14	C.W. ⟶

4.0 kw

ITEM CODE (4POLE)	A		B	C	D	RATED CURRENT (A)	WEIGHT (kg)
	PHASE	VOLTAGE (V)	POLE	POWER (kw)	FREQUENCY (Hz)		
T44056	3Φ	230/400	4	4.4	50/60	14.30	27.2
F44056		254/440				****	****

R.P.M	INSULATION CLASS	PROTECTION GRADE	EFFICIENCY	DUTY CYCLE		FRAME SIZE	DESIGN	ROTATION
1710	F	IP 55	83%	S1	S2	112	B14	C.W. ⟶

OVERALL DIMENSION

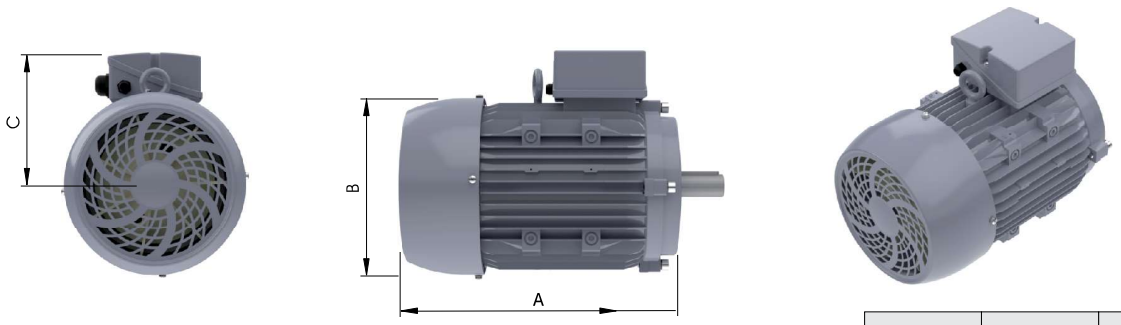

	A	B	C
3.0 kw	309	Φ198	152
4.0 kw	335	Φ220	156

DIMENSION

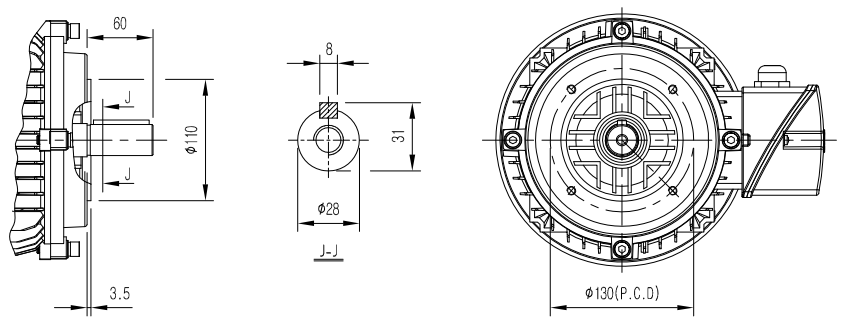

Note.

- ○ Mounting dimension : common use
- ○ B14(Design code) is international standard.
- ○ Please contact Hydro-Tek for *******

A

Relief valve	
Code	Pressure range
A	10 ~ 60 kg.f/cm²
B	50 ~ 150 kg.f/cm²
C	100 ~ 200 kg.f/cm²
D	150 ~ 250 kg.f/cm²
F	50 ~ 120 kg.f/cm² (Flow range 12 LPM ~30 LPM)

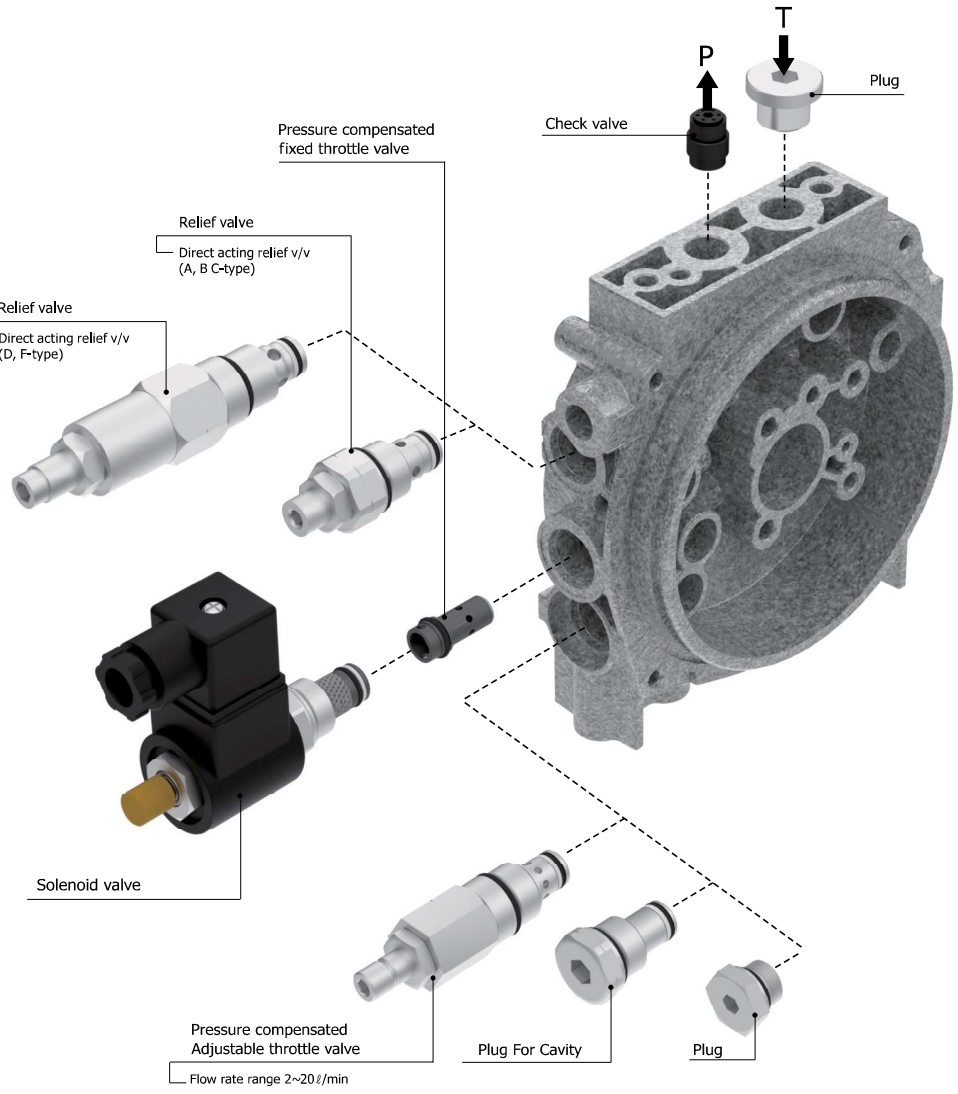

Normally Closed	
Normally Open	
Double Lock	

DIMENSION

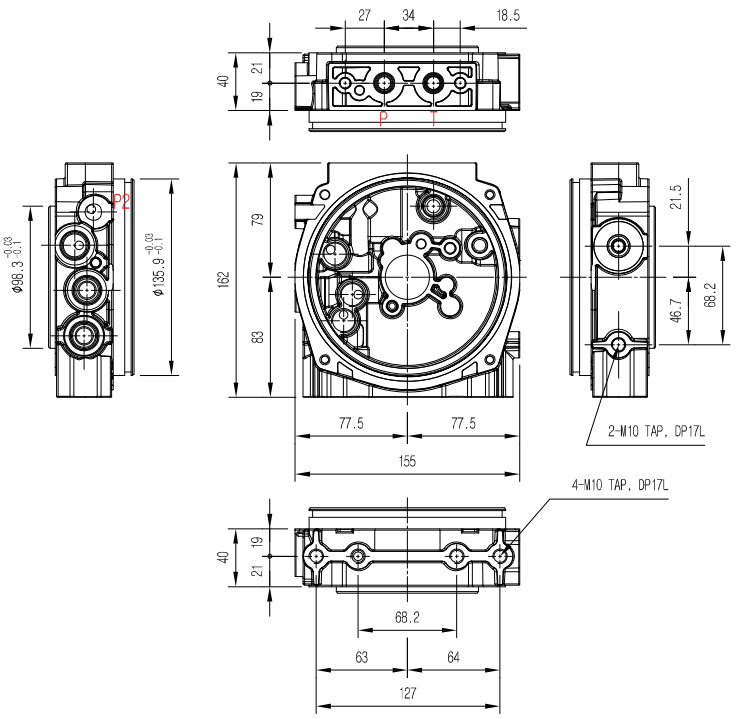

JA Center block

J CENTER BLOCK SPECIFICATION

DESCRIPTION	MAIN SPECIFICATION
1. Made of Aluminum material 2. Outlet port : PF 3/8" (Options : PF3/8", SAE6) 3. Return port : PF 3/8" (Options : PF3/8", SAE6) 4. Solenoid valve : Normally closed, Normally open, Double lock selectional 5. Pressure adjustable Relief valve 6. Applicable pump displacement : 0.2 cc/rev ~ 9.8 cc/rev 7. Only "M" series oil tank applicable	a : Check valve = PF 3/8" (HC38-2 Cavity) b : Relief valve = UNF 3/4" (HC08-2 Cavity) c : Solenoid valve = UNF 3/4" (HC08-2 Cavity) d : Orifice = (HC08-2 Cavity) e : GA = UNF 3/4" (HC08-2 Cavity) f : Lever valve = UNF 3/4" (HC08-2 Cavity) P : Primary Work Port = PF 3/8" P2 : Secondary Work Port = PF 1/4" T : Return Port = PF 3/8"

A

JA1 & JA2

VALVE ASSEMBLY

JA1

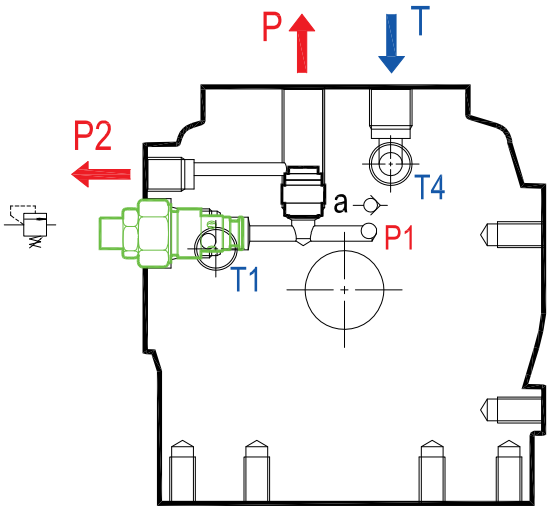

JA1

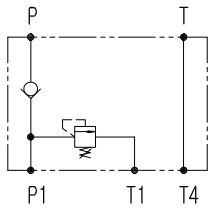

JA2

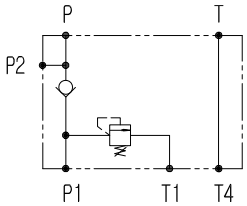

JA3 & JA4

VALVE ASSEMBLY

JA3

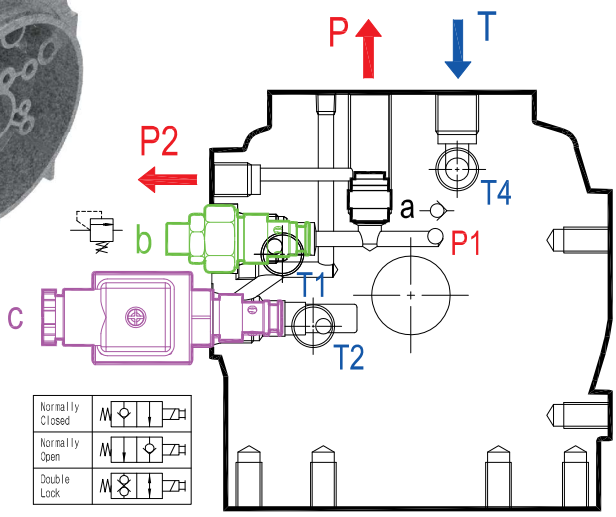

JA3

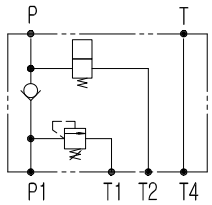

JA4

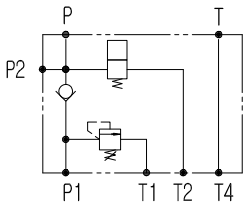

A

JA5 & JA6

VALVE ASSEMBLY

JA5

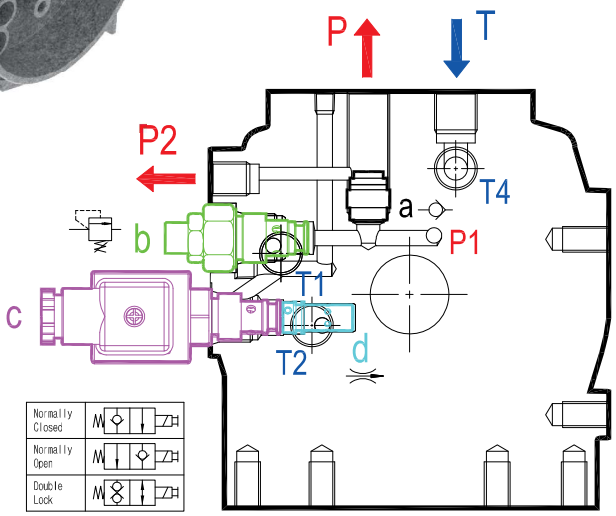

JA5

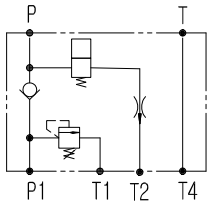

JA6

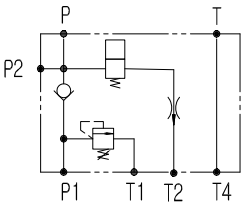

JA7 & JA8

VALVE ASSEMBLY

JA7

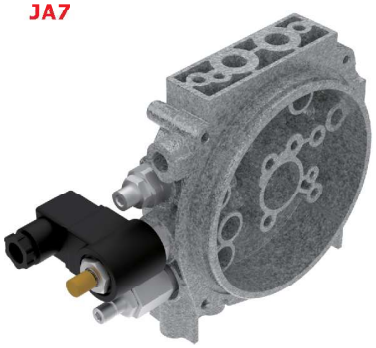

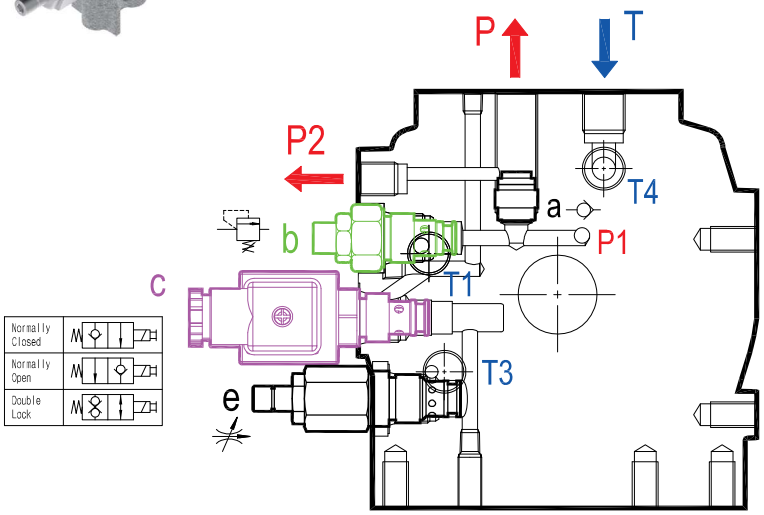

JA7

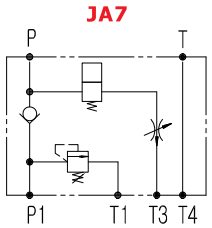

JA8

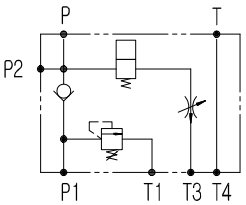

GEAR PUMP

TECHNICAL DATA

GO One group - Gear pump

ITEM CODE	C	PRESSURE (kg·f/㎠)			FLOW (ℓ/min)		SPEED (rpm)		A
	DISPLACEMENT (cc/rev)	P1	P2	P3	DC @2500 rpm	AC @1700 rpm	MAX	MIN	
GO11	1.1	230	250	270	2.7	1.8	6000	1000	74
GO16	1.6				4.0	2.7			76
GO21	2.1				5.2	3.5			78
GO23	2.3				5.7	3.9			79
GO27	2.7				6.7	4.6		800	80
GO32	3.2	210	230	250	8.0	5.4	5000		82
GO37	3.7				9.2	6.2	4500		84
GO42	4.2				10.5	7.1	4000		86
GO48	4.8	190	210	230	12.0	8.1	3500	600	88
GO58	5.8				14.5	9.8	3000		92
GO70	7.0	120	140	160	17.5	11.9	2500		96
GO80	8.0	100	120	140	20.0	13.6	2100		100
GO98	9.8				24.5	16.6	1800		107

DIMENSION

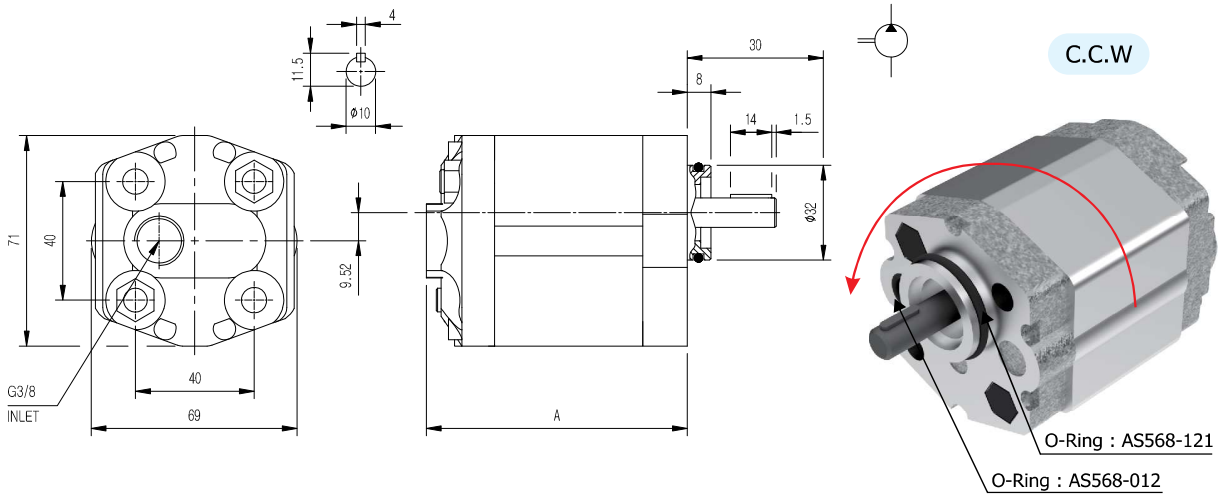

Note.
1. Please contact Hydro-Tek for Group 2, Group 3 pump
2. Please contact Hydro-Tek for tandem pump
3. Please contact Hydro-Tek for high pressure pump

PRESSURE DEFINITION

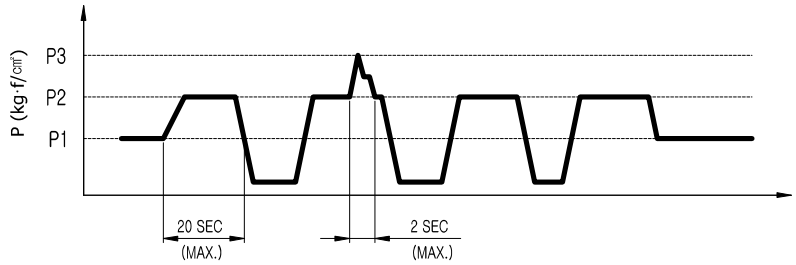

P3= Peak Max. Pressure
P2 = Intermittent Max. Pressure
P1 = Continuous Max. Pressure

FLANGE AND COUPLING

DIMENSION

B14 AC Motor by International design ID

Flange

ITEM CODE	Frame	Dimension		
		A(mm)	B(mm)	C(mm)
F080	80	100	90	40
F090	90	115	90	50
F112	112	130	90	63

Coupling

ITEM CODE	Frame	Dimension		
		A(mm)	B(mm)	C(mm)
C080/P	80	19	21.8	71
C090/P	90	24	28.3	76
C112/P	112	28	31	76

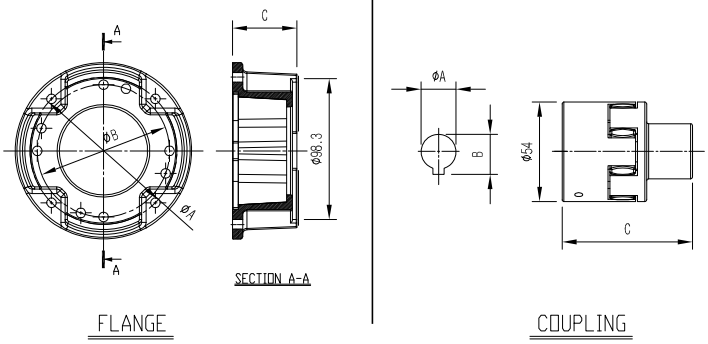

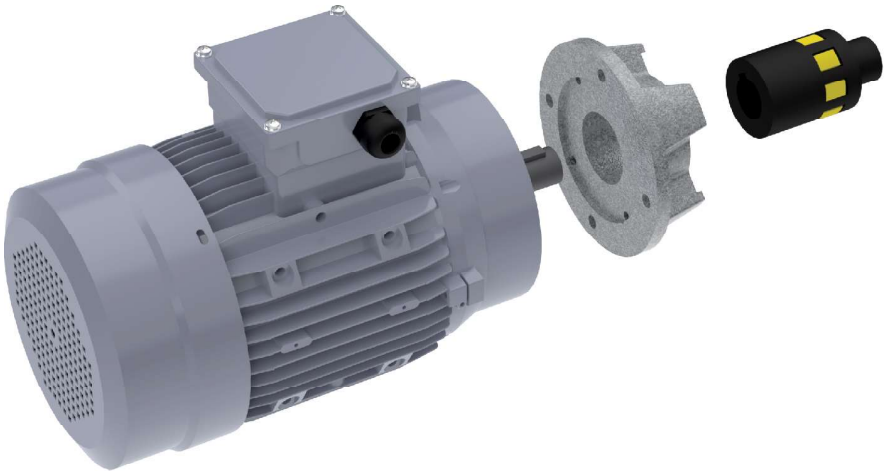

Steel oil tank for **'J'** series & **S**quare type

ITEM CODE	CAPACITY (ℓ)	
	TANK	USABLE
MS12	12	9.1
MS15	15	12.2

ITEM CODE	CAPACITY (ℓ)	
	TANK	USABLE
MS25	25	19.5
MS30	30	22.5

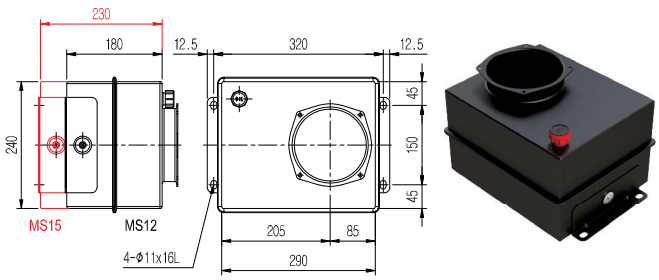

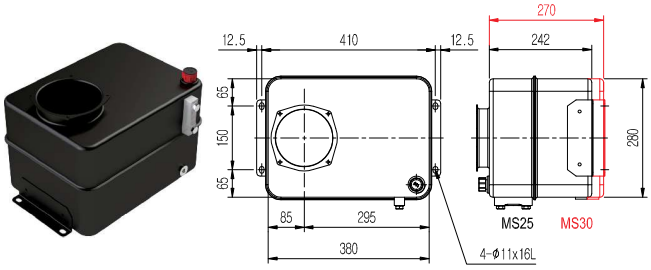

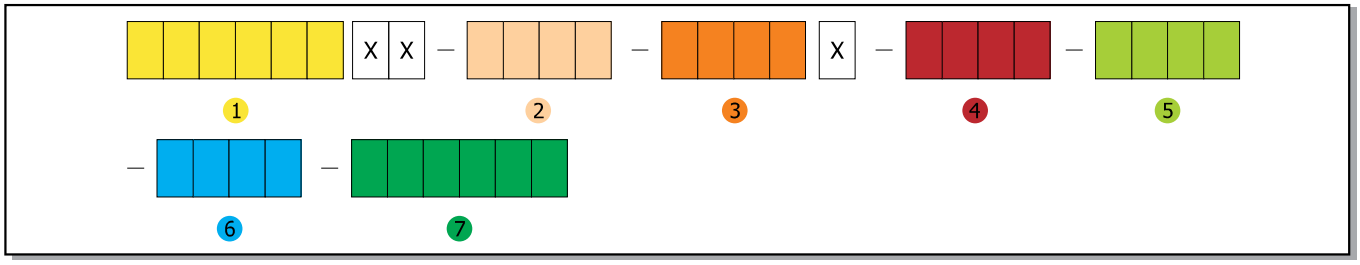

CODING SYSTEM

1 Motor	5 Tank
2 Center Block	6 Built in Valve
3 Pump	7 Directional Valve
4 Mounting	

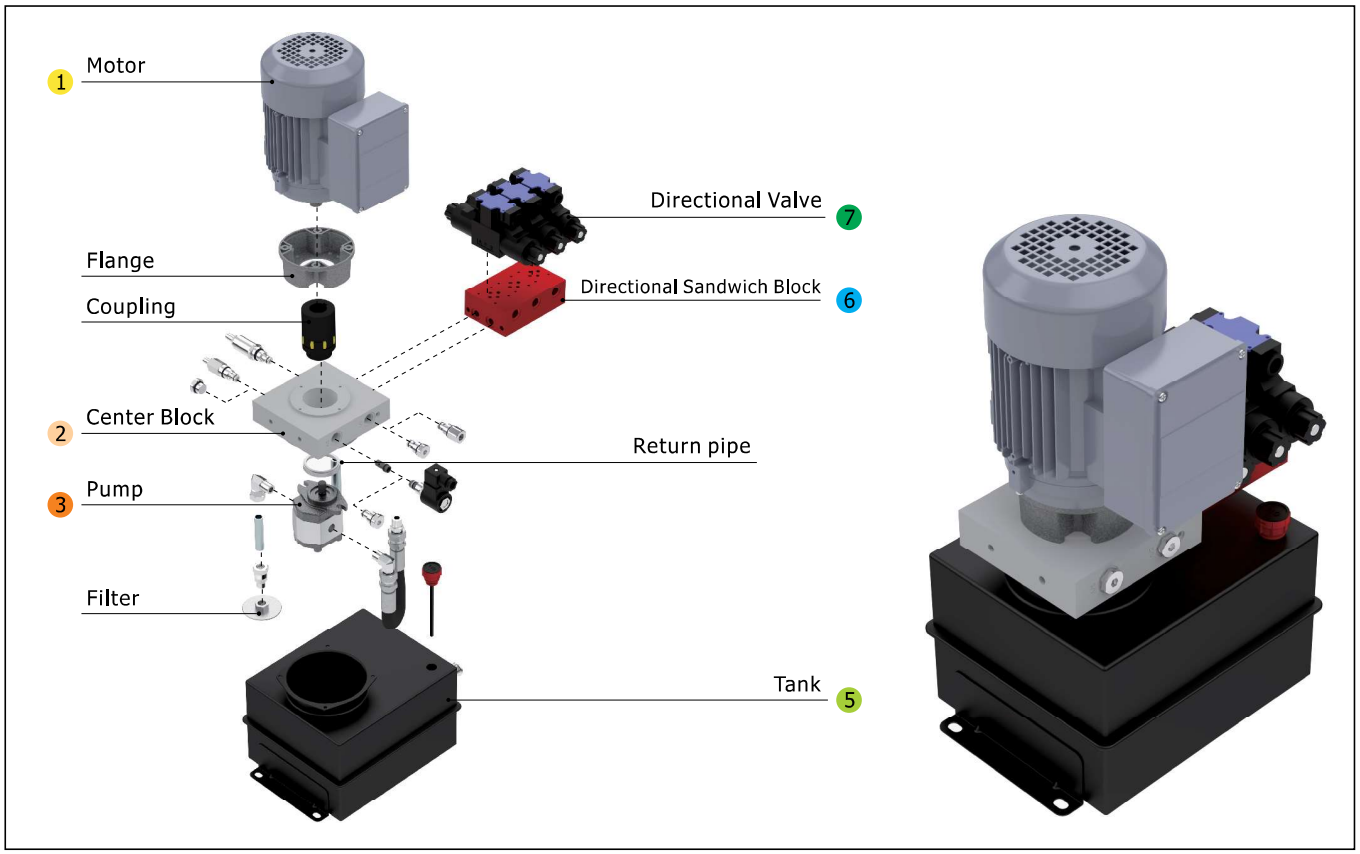

Order coding example

Description :
① Motor Part: 3Phase 3.0kw 50/60Hz CW
② Center Block: Series-JU, No1 type, Relief valve 120kgf/㎠
③ Pump: Gear Pump One Group, CCW, 8.0cc/rev
④ Mounting: Refer to 90 Page
⑤ Tank: JU-Center Block Square type
⑥ Built in Valve: Directional Sandwich Block
⑦ Directional Valve

Example – T 4 3 0 5 6 X X – J U 1 D – G 1 7 6 X – V M M X – M S 1 2 – B H 3 3 – Y A 4 3 1 D

(1: T 4 3 0 5 6; 2: J U 1 D; 3: G 1 7 6; 4: V M M X; 5: M S 1 2; 6: B H 3 3; 7: Y A 4 3 1 D)

TECHNICAL DATA

0.75kw

ITEM CODE (4 POLE)	A		B	C	D	RATED CURRENT (A)	WEIGHT (kg)
	PHASE	VOLTAGE (V)	POLE	POWER (W)	FREQUENCY (Hz)		
S40760	1Φ	220	4	0.75	60	4.76	11.6
R.P.M	INSULATION CLASS	PROTECTION GRADE	EFFICENCY	DUTY CYCLE	FRAME SIZE	DESIGN	ROTATION
1670	B	IP 54	71.8%	S1	80	HD	← C.C.W

TECHNICAL DATA

1.5kw

ITEM CODE (4 POLE)	A		B	C	D	RATED CURRENT (A)	WEIGHT (kg)
	PHASE	VOLTAGE (V)	POLE	POWER (W)	FREQUENCY (Hz)		
S41560	1Φ	220	4	1.5	60	8.7	18
R.P.M	INSULATION CLASS	PROTECTION GRADE	EFFICENCY	DUTY CYCLE	FRAME SIZE	DESIGN	ROTATION
1670	B	IP 54	78%	S1	90	HD	← C.C.W

MOUNTING DIMENSION

1Phase C-Face(B14) Standard Type

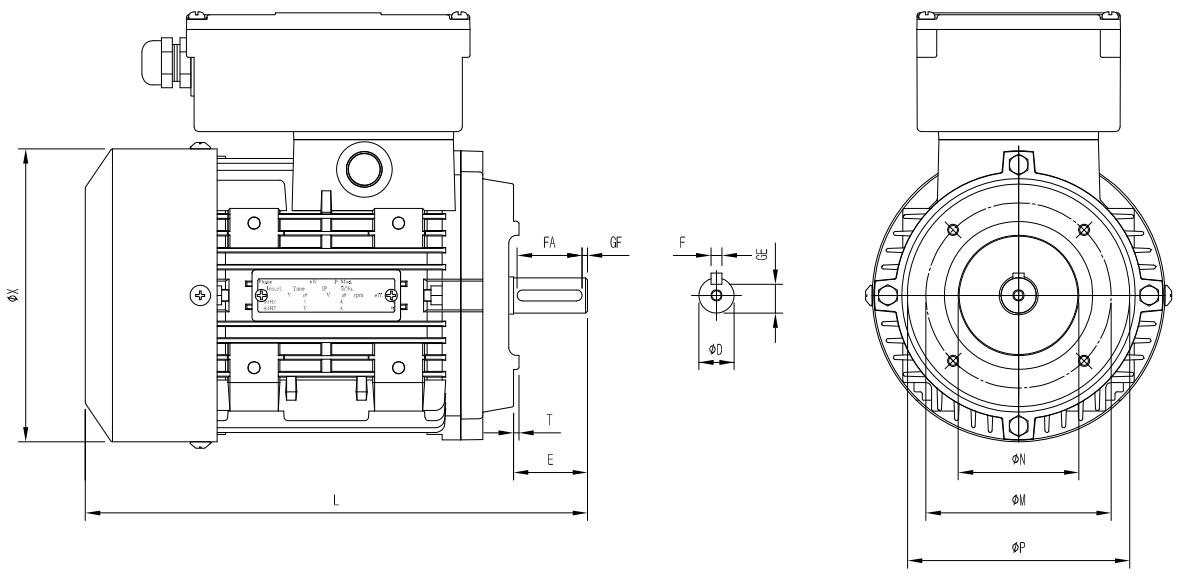

TECHNICAL DATA

FRAME NO.	OUTPUT			DIMENSIONS (mm)															BEARING	
	2P	4P	6P	HOLE			D	E	F	FA	GE	GF	HA	X	L	N	P	T	DE	ODE
				M	TAP	NO														
80M		0.75		100	M6	4	19	40	6	30	3.5	3	223	158	270	80	122	3	6204	6203
90L		1.5		115	M8	4	24	50	8	40	4	3	241	176	306	95	138	3	6205	6204

TECHNICAL DATA

0.75kw

ITEM CODE (4 POLE)	A		B	C	D	RATED CURRENT (A)	WEIGHT (kg)
	PHASE	VOLTAGE (V)	POLE	POWER (W)	FREQUENCY (Hz)		
T40756	3Φ	230 /400	4	0.75	50 / 60	3.50	7.6

R.P.M	INSULATION CLASS	PROTECTION GRADE	EFFICENCY	DUTY CYCLE		FRAME SIZE	DESIGN	ROTATION
1650	F	IP 55	70%	S1	S2	80	HD	← C.C.W

TECHNICAL DATA

1.5kw

ITEM CODE (4 POLE)	A		B	C	D	RATED CURRENT (A)	WEIGHT (kg)
	PHASE	VOLTAGE (V)	POLE	POWER (W)	FREQUENCY (Hz)		
T41556	3Φ	230 / 400	4	1.5	50 / 60	6.23	13.8

R.P.M	INSULATION CLASS	PROTECTION GRADE	EFFICENCY	DUTY CYCLE		FRAME SIZE	DESIGN	ROTATION
1670	F	IP 55	55%	S1	S2	90	HD	← C.C.W

MOUNTING DIMENSION

3Phase C-Face(B14) Standard Type

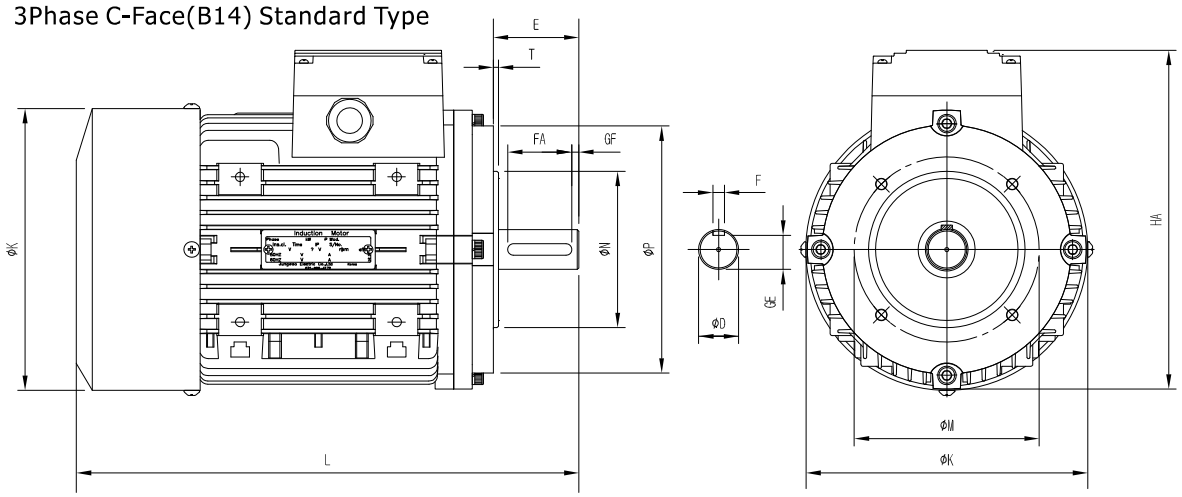

TECHNICAL DATA

FRAME NO.	OUTPUT			DIMENSIONS (mm)															INS CLASS	BEARING	
	2P	4P	6P	HOLE			ΦD	E	F	FA	GE	GF	HA	ΦK	L	ΦN	P	T		DE	ODE
				ΦM	TAP	NO															
71M	0.4	0.4		85	M6	4	14	30	5	20	11	3	177	140	214	70	121	2.5	B	6203	6202
	0.55			85	M6	4	14	30	5	20	11	3	177	140	214	70	121	2.5	B	6203	6202
80M	0.75	0.55	0.4	85	M5	4	19	30	5	20	15.5	3	193	158	259	80	132	3	B	6204	6203
	0.9	0.75		85	M5	4	19	30	5	20	15.5	3	193	158	259	80	132	3	B	6204	6203
	1.1	0.9		100	M6	4	19	40	6	30	15.5	3	193	158	259	80	132	3	B	6204	6203
90L	1.5	1.1	0.75	115	M8	4	24	50	8	40	20	3	211	176	292	95	138	3	B	6205	6204
	1.8	1.5		115	M8	4	24	50	8	40	20	3	211	176	292	95	138	3	B	6205	6204
	2.2	1.8		115	M8	4	24	50	8	40	20	3	211	176	292	95	138	3	B	6205	6204
100L		2.2	1.5	130	M8	4	28	60	8	45	24	5	239	198	353	110	175	3.5	B	6206	6205
	3.0	3.0	2.2	130	M8	4	28	60	8	45	24	5	239	198	353	110	175	3.5	B	6206	6205
	4.0	4.0		130	M8	4	28	60	8	45	24	5	239	198	353	110	175	3.5	B	6206	6205

AC-MOTOR

TECHNICAL DATA

3.0 kw

ITEM CODE (4POLE)	A		B	C	D	RATED CURRENT (A)	WEIGHT (kg)
	PHASE	VOLTAGE (V)	POLE	POWER (kw)	FREQUENCY (Hz)		
T43056	3Φ	230/400	4	3.0	50/60	****	****
F43056		254/440				****	****

R.P.M	INSULATION CLASS	PROTECTION GRADE	EFFICIENCY	DUTY CYCLE		FRAME SIZE	DESIGN	ROTATION
1700	F	IP 55	80%	S1	S2	100	B14	C.W. ⟶

4.0 kw

ITEM CODE (4POLE)	A		B	C	D	RATED CURRENT (A)	WEIGHT (kg)
	PHASE	VOLTAGE (V)	POLE	POWER (kw)	FREQUENCY (Hz)		
T44056	3Φ	230/400	4	4.4	50/60	14.30	27.2
F44056		254/440				****	****

R.P.M	INSULATION CLASS	PROTECTION GRADE	EFFICIENCY	DUTY CYCLE		FRAME SIZE	DESIGN	ROTATION
1710	F	IP 55	83%	S1	S2	112	B14	C.W. ⟶

OVERALL DIMENSION

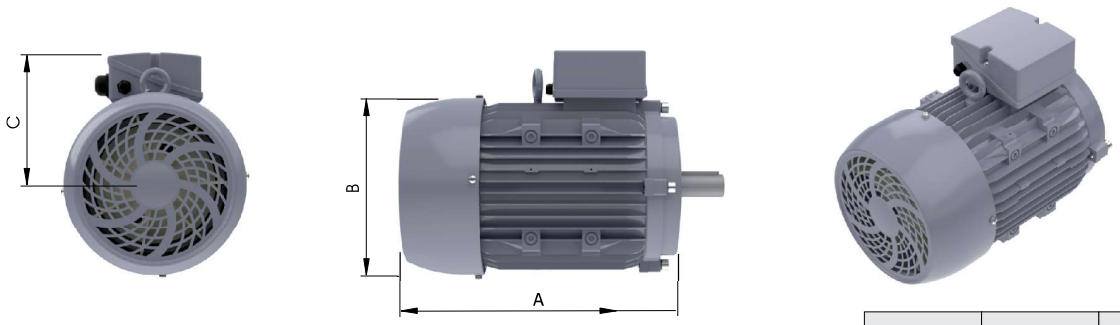

	A	B	C
3.0 kw	309	Φ198	152
4.0 kw	335	Φ220	156

DIMENSION

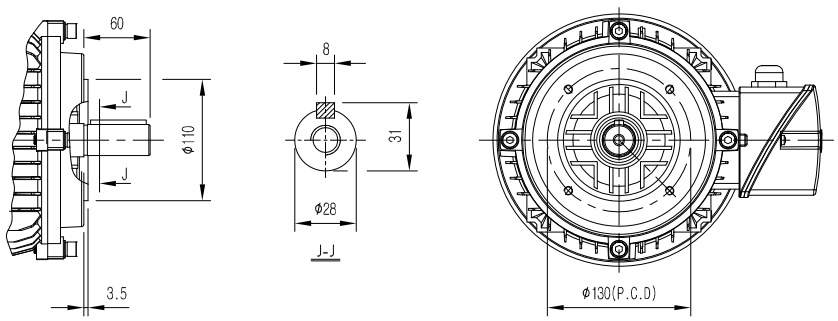

Note.

- Mounting dimension : common use
- B14(Design code) is international standard.
- Please contact Hydro-Tek for *******

CENTER BLOCK

Relief valve	
Code	Pressure range
A	10 ~ 60 kg.f/cm²
B	50 ~ 150 kg.f/cm²
C	100 ~ 200 kg.f/cm²
D	150 ~ 250 kg.f/cm²
F	50 ~ 120 kg.f/cm² (Flow range 12 LPM ~30 LPM)

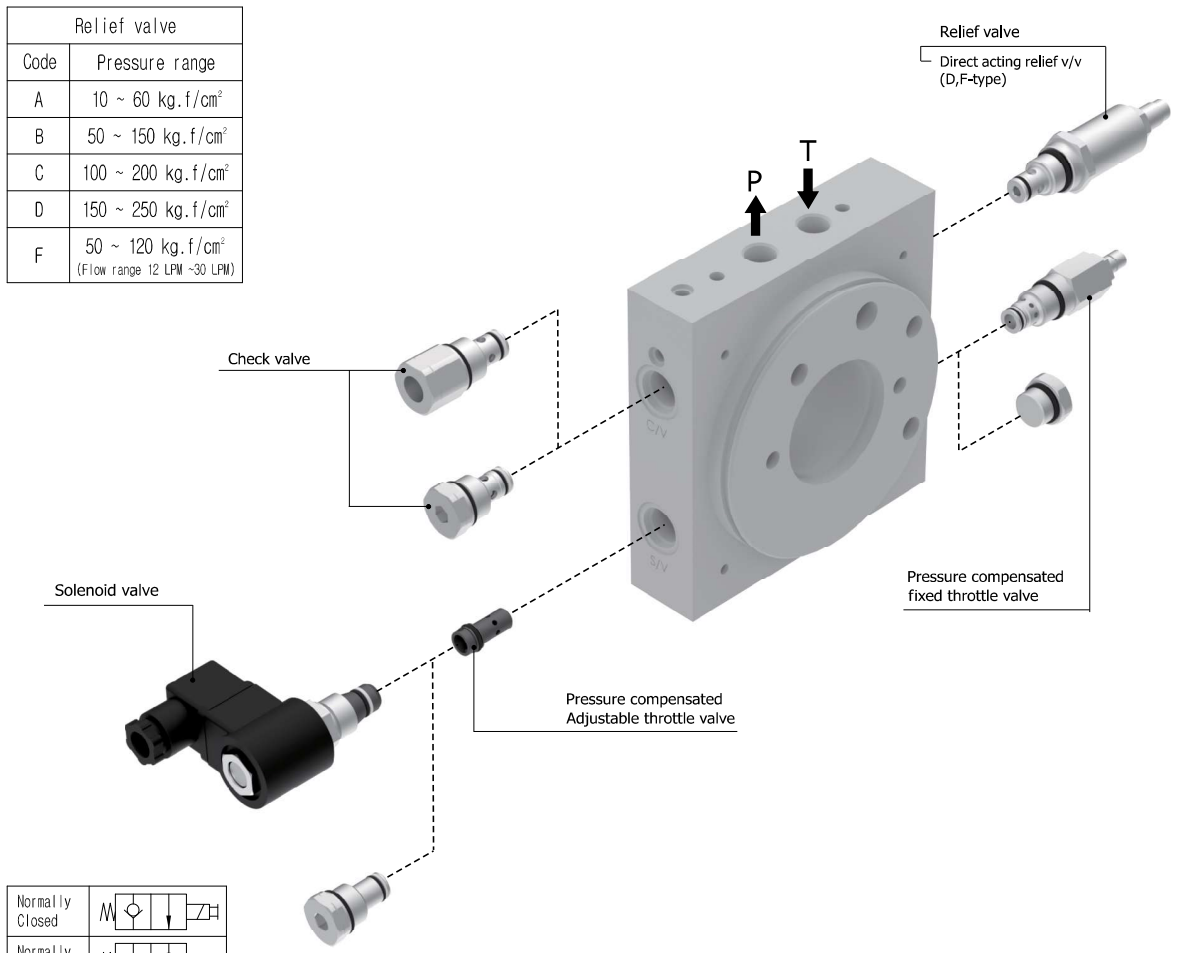

A

Normally Closed	
Normally Open	
Double Lock	

DIMENSION

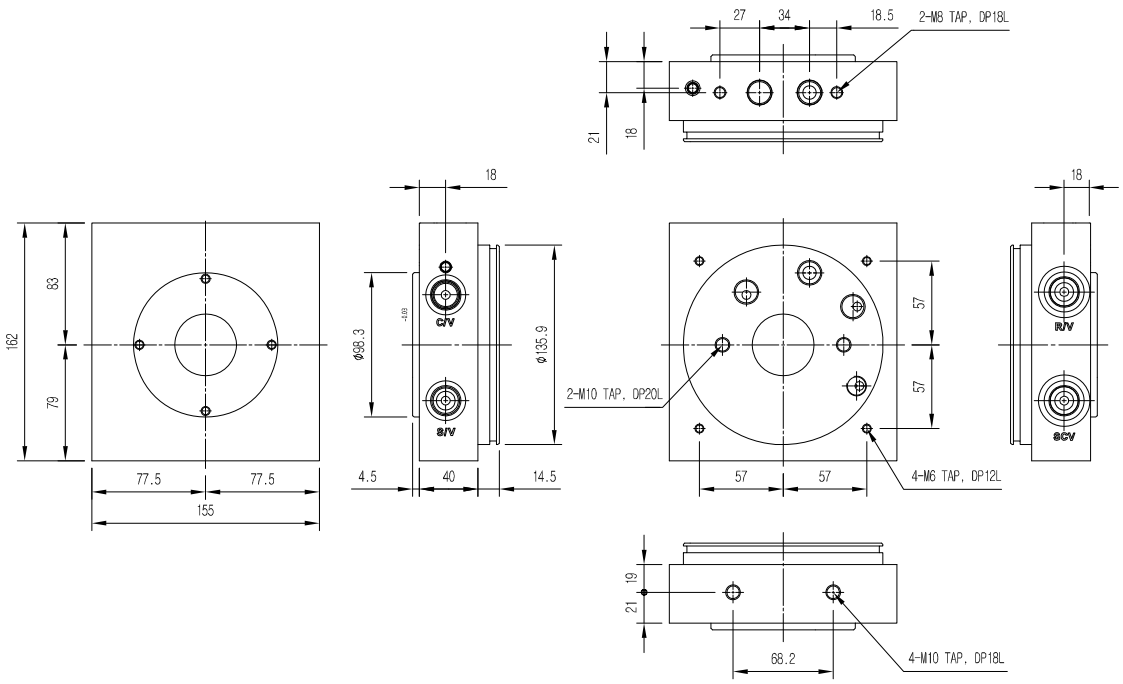

JU CENTER BLOCK SPECIFICATION

DESCRIPTION	MAIN SPECIFICATION
1. Made of Aluminum material 2. Outlet port (P1) : PF3/8" Outiet port (P2) : PF1/4" 3. Return port : PT3/8" 4. Solenoid valve : Normally closed, Normally open, Double lock selectional 5. Pressure adjustable relief valve 6. Applicable pump displacement : 1.4cc/rev ~ 13.8cc/rev	a : Check valve = UNF 3/4" (HC08-2 Cavity) b : Relief valve = UNF 3/4" (HC08-2 Cavity) c : Solenoid valve = UNF 3/4" (HC08-2 Cavity) d : Orifice (HC08-2 Cavity) e : GA = UNF 3/4" (HC08-2 Cavity) P : Primary Work Port = PF 3/8" P2 : Secondary Work Port = PF 1/4" T : Return Port = PT 3/8"

A

JU1 / JU2

VALVE ASSEMBLY

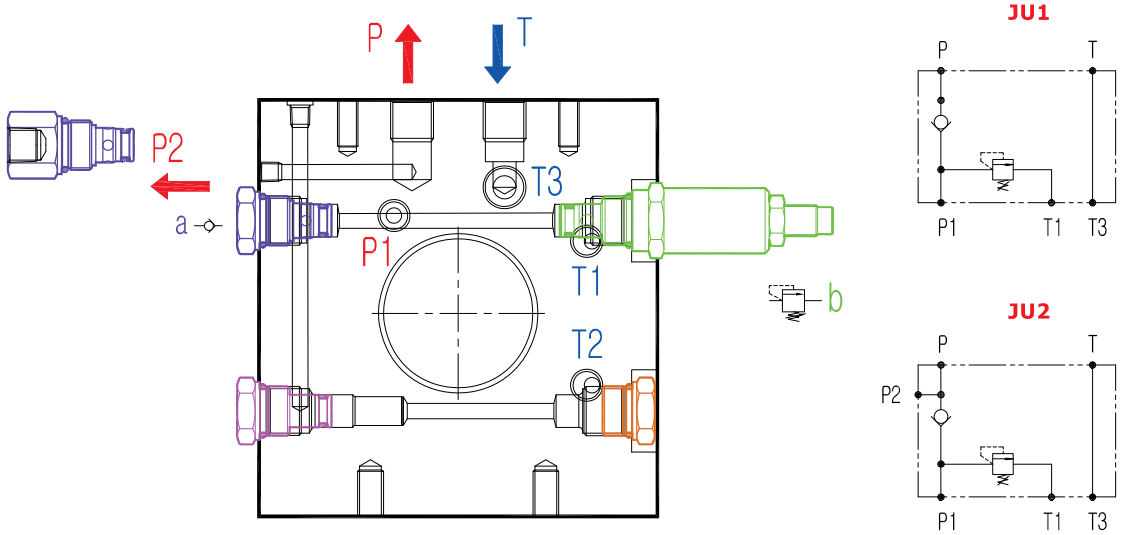

JU3 / JU4

VALVE ASSEMBLY

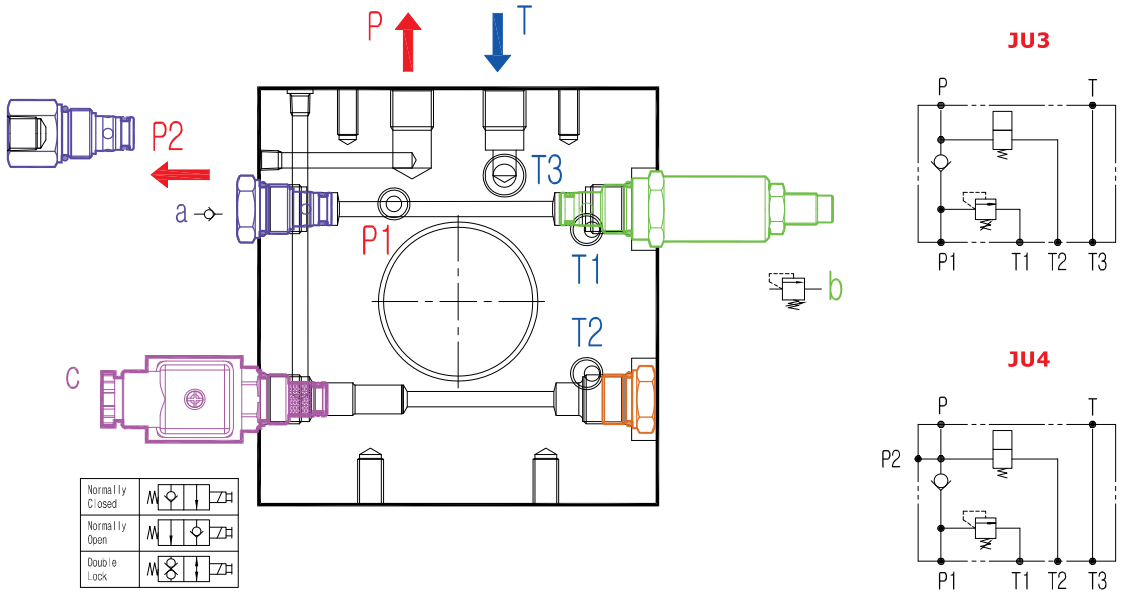

Note. Ju1 / JU2 - Center block for Double acting system.
Please refer to page 103~107 in case you use with a block for Double acting system.

A

JU5 / JU6

VALVE ASSEMBLY

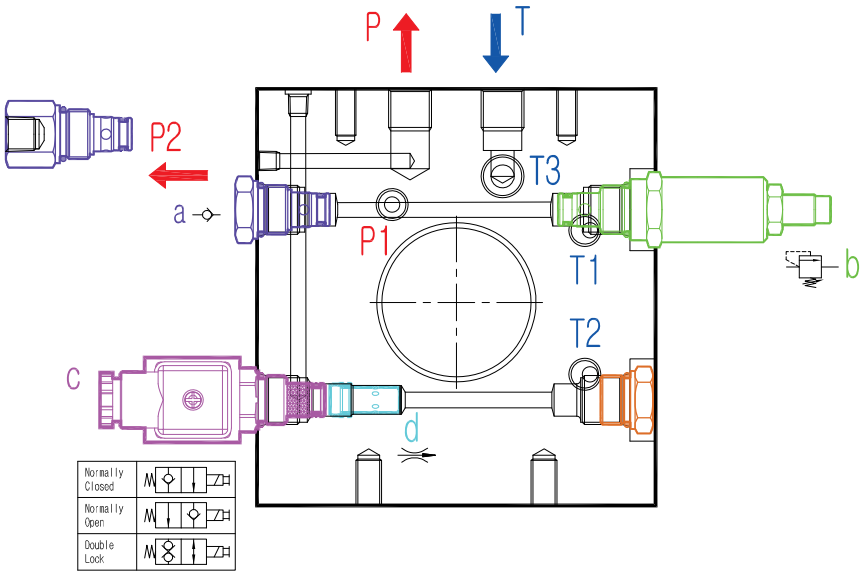

JU5

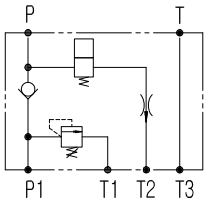

JU6

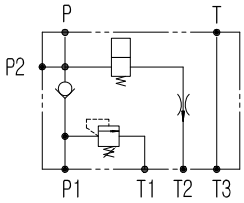

JU7 / JU8

VALVE ASSEMBLY

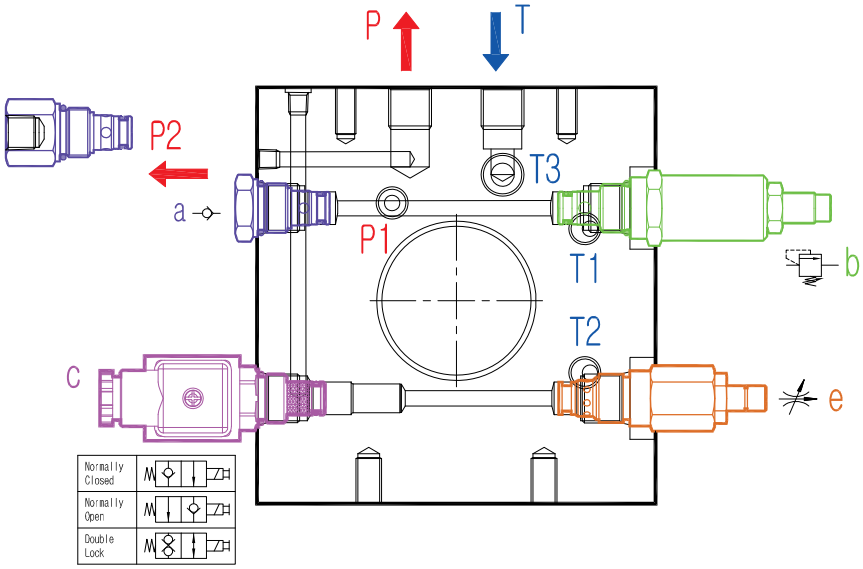

JU7

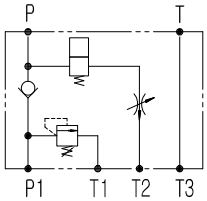

JU8

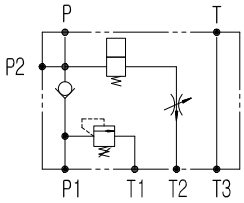

GEAR PUMP

- "D" and "d" ports are machined in compliance with threaded port with O-ring seal in truncated housing SAE J1926/1(ISO J1926-1).
- To mount the pump, 4-M8 screws, with a torque wrench setting fixed at 30±3 Nm.

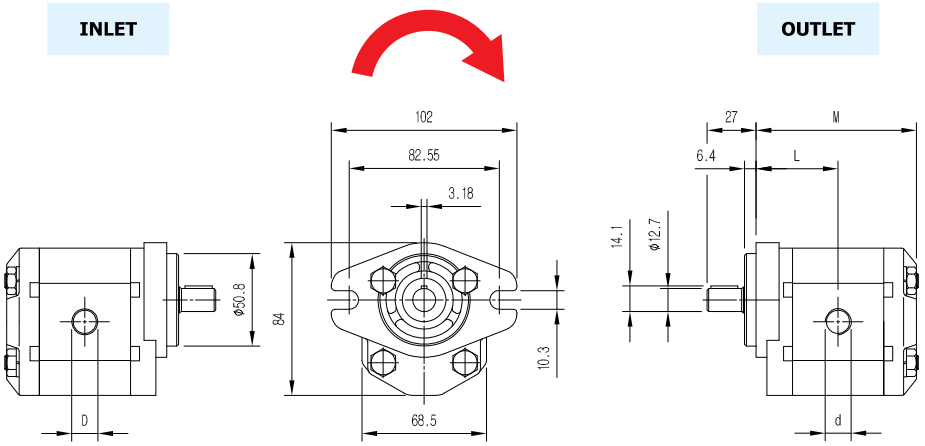

Rotation: CW

P1= CONTINUOUS MAX. PRESSURE
P2= INTERMITTENT MAX. PRESSURE
P3= PEAK MAX. PRESSURE

ITEM CODE	Displacement	Max. Pressure			Max. Speed	Min. speed	Dimensions			
		P1	P2	P3			M	L	D	d
	cm³/rev	bar	bar	bar	rpm	rpm	mm	mm	mm	mm
G114	1.4	250	270	290	6000	800	82.5	42	PT1/2	PT3/8
G121	2.1	250	270	290	6000	800	54.5	43	PT1/2	PT3/8
G128	2.8	250	270	290	5000	800	86.5	44	PT1/2	PT3/8
G135	3.5	250	270	290	5000	800	88.5	45	PT1/2	PT3/8
G141	4.1	250	270	290	4000	800	90.5	46	PT1/2	PT3/8
G152	5.2	230	2245	260	4000	800	93.5	47.5	PT1/2	PT3/8
G162	6.2	230	245	260	3500	800	96.5	49	PT1/2	PT3/8
G176	7.6	200	215	230	3000	600	100.5	51	PT3/4	PT1/2
G193	9.3	180	195	210	2500	600	105.5	53.5	PT3/4	PT1/2
G1A1	11.0	170	185	200	2500	600	110.5	56	PT3/4	PT1/2
G1A3	13.8	150	165	180	2000	600	118.5	60	PT3/4	PT1/2

FLANGE AND COUPLING

DIMENSION

B14 AC Motor by International design ID

Flange

ITEM CODE	Frame	Dimension		
		A(mm)	B(mm)	C(mm)
F080	80	100	90	40
F090	90	115	90	50
F112	112	130	90	63

Coupling

ITEM CODE	Frame	Dimension		
		A(mm)	B(mm)	C(mm)
C080/U	80	19	21.8	71
C090/U	90	24	28.3	76
C112/U	112	29	31	76

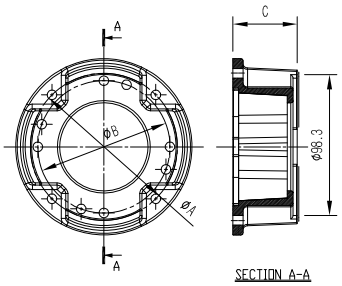

FLANGE

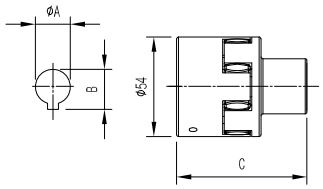

COUPLING

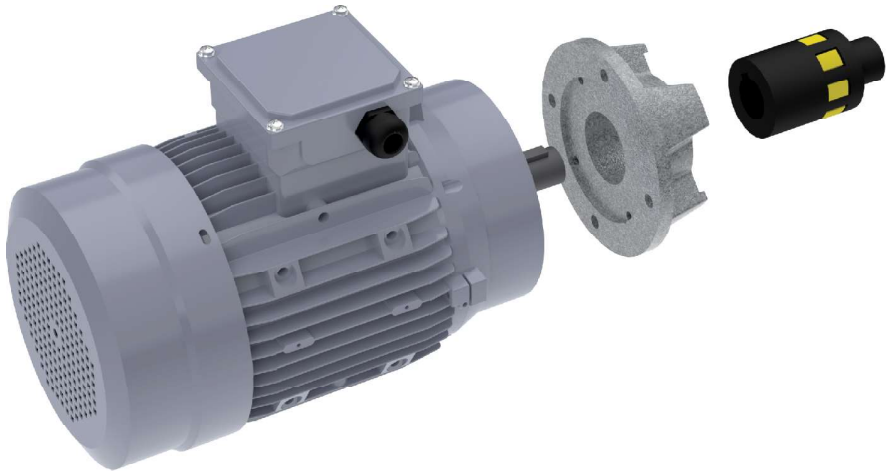

Steel oil tank for **'J'** series & **S**quare type

ITEM CODE	CAPACITY (ℓ)	
	TANK	USABLE
MS12	12	9.1
MS15	15	12.2

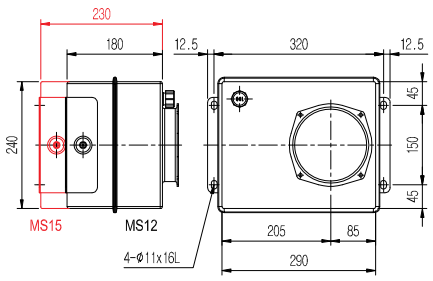

ITEM CODE	CAPACITY (ℓ)	
	TANK	USABLE
MS25	25	19.5
MS30	30	22.5

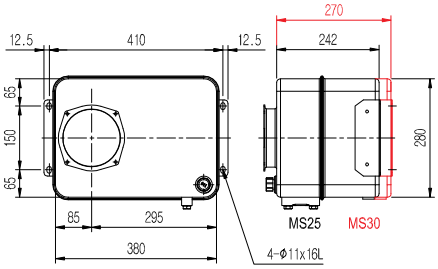

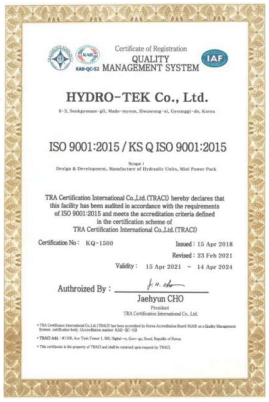

Certificate of Registration
QUALITY MANAGEMENT SYSTEM

HYDRO-TEK Co., Ltd.

8-3, Seokgyomun-gil, Madu-myeon, Hwaseong-si, Gyeonggi-do, Korea

ISO 9001:2015 / KS Q ISO 9001:2015

Scope :
Design & Development, Manufacture of Hydraulic Units, Mini Power Pack

TRA Certification International Co.,Ltd (TRACI) hereby declares that this facility has been audited in accordance with the requirements of ISO 9001:2015 and meets the accreditation criteria defined in the certification scheme of TRA Certification International Co.,Ltd (TRACI)

Certification No : KQ-1500
Issued : 15 Apr 2018
Revised : 23 Feb 2021
Validity : 15 Apr 2021 ~ 14 Apr 2024

Authroized By :
Jaehyun CHO
President
TRA Certification International Co., Ltd.

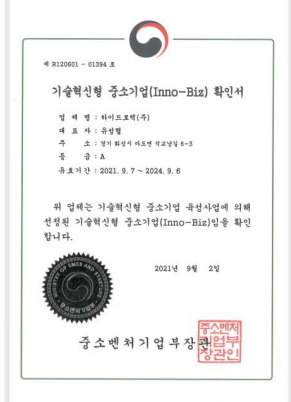

제 R120601 - 01394 호

기술혁신형 중소기업(Inno-Biz) 확인서

업 체 명 : 하이드로텍(주)
대 표 자 : 유선형
주 소 : 경기 화성시 마도면 석교남길 6-3
등 급 : A
유효기간 : 2021. 9. 7 ~ 2024. 9. 6

위 업체는 기술혁신형 중소기업 육성사업에 의해 선정된 기술혁신형 중소기업(Inno-Biz)임을 확인합니다.

2021년 9월 2일

중소벤처기업부장관

디자인등록증
CERTIFICATE OF DESIGN REGISTRATION

등록 Registration Number 제 30-0965085 호
출원번호 Application Number 제 30-2017-0025930 호
출원일 Filing Date 2017년 06월 08일
등록일 Registration Date 2018년 07월 11일
등록의 구분 Kind of Registration 신 시 등 록 (Original Registration)
물품류 Class 제23류
디자인을 적용시 되는 물품 Product 유압 제어용 블럭

디자인권자 Owner
하이드로텍(주)(134511-*******)
경기도 화성시 마도면 석교남길 6-3

창작자 Creator
성명(610601)6-*******)
경기도 성남시 분당구 정자동 190번지 원은마을 현진마이아트 809-1504

위의 디자인은 "디자인보호법"에 따라 디자인등록원부에 등록되었음을 증명합니다.
This is to certify that, in accordance with the Design Protection Act, a design has been registered at the Korean Intellectual Property Office.

2018년 07월 11일
특허청장
COMMISSIONER, KOREAN INTELLECTUAL PROPERTY OFFICE
성 춘 모

디자인등록증
CERTIFICATE OF DESIGN REGISTRATION

등록 Registration Number 제 30-0965086 호
출원번호 Application Number 제 30-2017-0025928 호
출원일 Filing Date 2017년 06월 08일
등록일 Registration Date 2018년 07월 11일
등록의 구분 Kind of Registration 신 시 등 록 (Original Registration)
물품류 Class 제23류
디자인을 적용시 되는 물품 Product 유압 제어용 블럭

디자인권자 Owner
하이드로텍(주)(134511-*******)
경기도 화성시 마도면 석교남길 6-3

창작자 Creator
성명(610601)6-*******)
경기도 성남시 분당구 정자동 190번지 원은마을 현진마이아트 809-1504

위의 디자인은 "디자인보호법"에 따라 디자인등록원부에 등록되었음을 증명합니다.
This is to certify that, in accordance with the Design Protection Act, a design has been registered at the Korean Intellectual Property Office.

2018년 07월 11일
특허청장
COMMISSIONER, KOREAN INTELLECTUAL PROPERTY OFFICE
성 춘 모

특허증
CERTIFICATE OF PATENT

특허 Patent Number 제 10-1933530 호
출원번호 Application Number 제 10-2017-0113004 호
출원일 Filing Date 2017년 09월 05일
등록일 Registration Date 2018년 12월 21일
발명의 명칭 Title of the Invention
기연재의 밸브를 지닌 유압 센서용 블록

특허권자 Patentee
하이드로텍(주)(134511-*******)
경기도 화성시 마도면 석교남길 6-3

발명자 Inventor
성명(610601)6-*******)
경기도 성남시 분당구 정자동 190번지 원은마을 현진마이아트 809-1504

위의 발명은 「특허법」에 따라 특허등록원부에 등록되었음을 증명합니다.
This is to certify that, in accordance with the Patent Act, a patent for the invention has been registered at the Korean Intellectual Property Office.

2018년 12월 21일
특허청장
COMMISSIONER, KOREAN INTELLECTUAL PROPERTY OFFICE
박 원 주

특허증
CERTIFICATE OF PATENT

특허 Patent Number 제 10-1940278 호
출원번호 Application Number 제 10-2017-0112783 호
출원일 Filing Date 2017년 09월 04일
등록일 Registration Date 2019년 01월 14일
발명의 명칭 Title of the Invention
정확보상기능을 갖는 유압구동시스템

특허권자 Patentee
하이드로텍(주)(134511-*******)
경기도 화성시 마도면 석교남길 6-3

발명자 Inventor
성명(610601)6-*******)
경기도 성남시 분당구 정자동 190번지 원은마을 현진마이아트 809-1504

위의 발명은 「특허법」에 따라 특허등록원부에 등록되었음을 증명합니다.
This is to certify that, in accordance with the Patent Act, a patent for the invention has been registered at the Korean Intellectual Property Office.

2019년 01월 14일
특허청장
COMMISSIONER, KOREAN INTELLECTUAL PROPERTY OFFICE
박 원 주

특허증
CERTIFICATE OF PATENT

특허 Patent Number 제 10-1943396 호
출원번호 Application Number 제 10-2017-0112656 호
출원일 Filing Date 2017년 09월 04일
등록일 Registration Date 2019년 01월 23일
발명의 명칭 Title of the Invention
복동실린더용 유압구동시스템

특허권자 Patentee
하이드로텍(주)(134511-*******)
경기도 화성시 마도면 석교남길 6-3

발명자 Inventor
성명(610601)6-*******)
경기도 성남시 분당구 정자동 190번지 원은마을 현진마이아트 809-1504

위의 발명은 「특허법」에 따라 특허등록원부에 등록되었음을 증명합니다.
This is to certify that, in accordance with the Patent Act, a patent for the invention has been registered at the Korean Intellectual Property Office.

2019년 01월 23일
특허청장
COMMISSIONER, KOREAN INTELLECTUAL PROPERTY OFFICE
박 원 주

특허증
CERTIFICATE OF PATENT

특허 Patent Number 제 10-1978226 호
출원번호 Application Number 제 10-2017-0157089 호
출원일 Filing Date 2017년 11월 23일
등록일 Registration Date 2019년 05월 08일
발명의 명칭 Title of the Invention
시트스 밸브의 유체충격 완화장치

특허권자 Patentee
하이드로텍(주)(134511-*******)
경기도 화성시 마도면 석교남길 6-3

발명자 Inventor
성명(610601)6-*******)
경기도 성남시 분당구 정자동 190번지 원은마을 현진마이아트 809-1504

위의 발명은 「특허법」에 따라 특허등록원부에 등록되었음을 증명합니다.
This is to certify that, in accordance with the Patent Act, a patent for the invention has been registered at the Korean Intellectual Property Office.

2019년 05월 08일
특허청장
COMMISSIONER, KOREAN INTELLECTUAL PROPERTY OFFICE
박 원 주

특허증
CERTIFICATE OF PATENT

특허 Patent Number 제 10-2030746 호
출원번호 Application Number 제 10-2017-0157087 호
출원일 Filing Date 2017년 11월 23일
등록일 Registration Date 2019년 10월 02일
발명의 명칭 Title of the Invention
식물용 밸브보호밸브

특허권자 Patentee
하이드로텍(주)(134511-*******)
경기도 화성시 마도면 석교남길 6-3

발명자 Inventor
성명(610601)6-*******)
경기도 성남시 분당구 정자동 190번지 원은마을 현진마이아트 809-1504

위의 발명은 「특허법」에 따라 특허등록원부에 등록되었음을 증명합니다.
This is to certify that, in accordance with the Patent Act, a patent for the invention has been registered at the Korean Intellectual Property Office.

2019년 10월 02일
특허청장
COMMISSIONER, KOREAN INTELLECTUAL PROPERTY OFFICE
박 원 주

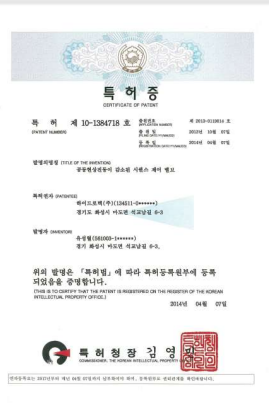

특 허 증
CERTIFICATE OF PATENT

특 허 제 10-1384718 호 (PATENT NUMBER)
출원번호 (APPLICATION NUMBER) 제 2013-0110814 호
출원일 (FILING DATE) 2013년 10월 07일
등록일 (REGISTRATION DATE) 2014년 04월 07일

발명의명칭 (TITLE OF THE INVENTION)
유압펌프연동식 감소회 자동스 제어 밸브

특허권자 (PATENTEE)
하이드로텍(주)(134511-6******)
경기도 화성시 마도면 석교남길 6-3

발명자 (INVENTOR)
유성렬(561003-1******)
경기 화성시 마도면 석교남길 6-3.

위의 발명은 「특허법」에 따라 특허등록원부에 등록되었음을 증명합니다.
(THIS IS TO CERTIFY THAT THE PATENT IS REGISTERED ON THE REGISTER OF THE KOREAN INTELLECTUAL PROPERTY OFFICE.)

2014년 04월 07일

특허청장 김 영
COMMISSIONER, THE KOREAN INTELLECTUAL PROPERTY OFFICE

전자등록되는 2013년부터 제신 04월 07일까지 상표등록이 되며, 등록번호로 변리검색을 확인하십시오.

특 허 증
CERTIFICATE OF PATENT

특 허 제 10-0915614 호 (PATENT NUMBER)
출원번호 (APPLICATION NUMBER) 제 2000-0010805 호
출원일 (FILING DATE) 2000년 03월 30일
등록일 (REGISTRATION DATE) 2009년 03월 30일

발명의명칭 (TITLE OF THE INVENTION)
리무스톨러이드가 장착된 스톨을 이용하여 충돌기기로의 유압술 조절하는 센서밸 블록

특허권자 (PATENTEE)
하이드로텍(주)(134511-0*******)
경기 화성시 마도면 석교리 443-9

발명자 (INVENTOR)
유성렬(561003-1*******)
경기도 화성시 마도면 석교리 443-9

위의 발명은 「특허법」에 따라 특허등록원부에 등록되었음을 증명합니다.
(THIS IS TO CERTIFY THAT THE PATENT IS REGISTERED ON THE REGISTER OF THE KOREAN INTELLECTUAL PROPERTY OFFICE.)

2009년 03월 30일

특 허 청 장
COMMISSIONER, THE KOREAN INTELLECTUAL PROPERTY OFFICE

특 허 증
CERTIFICATE OF PATENT

특 허 제 10-0915611 호 (PATENT NUMBER)
출원번호 (APPLICATION NUMBER) 제 2000-0010814 호
출원일 (FILING DATE) 2000년 03월 30일
등록일 (REGISTRATION DATE) 2009년 03월 30일

발명의명칭 (TITLE OF THE INVENTION)
리무스톨러이드를 가지고 내부스톨러저제어가 가능한 유압기기로의 유압술 조절하는 센서밸 블록

특허권자 (PATENTEE)
하이드로텍(주)(134511-0*******)
경기 화성시 마도면 석교리 443-9

발명자 (INVENTOR)
유성렬(561003-1*******)
경기도 화성시 마도면 석교리 443-9

위의 발명은 「특허법」에 따라 특허등록원부에 등록되었음을 증명합니다.
(THIS IS TO CERTIFY THAT THE PATENT IS REGISTERED ON THE REGISTER OF THE KOREAN INTELLECTUAL PROPERTY OFFICE.)

2009년 03월 30일

특 허 청 장
COMMISSIONER, THE KOREAN INTELLECTUAL PROPERTY OFFICE

디자인등록증
CERTIFICATE OF DESIGN REGISTRATION

등 록 Registration Number: 제 30-1130622 호

출원번호 Application Number: 제30-2020-0057781 호
출원일 Filing Date: 2020년 11월 26일
등록일 Registration Date: 2021년 10월 01일
등록의 구분 Type of Registration: 신 규 등 록 (EXAMINED REGISTRATION)
분류번호 Class: 제23류
디자인에 대상이 되는 물품 Product: 유압밸브

디자인권자 Owner:
하이드로텍(주)(134511-*******)
경기도 화성시 마도면 석교남길 6-3

창작자 Creator:
성명(식별번호)(660118-*******)
경기도 성남시 분당구 정자동 191번지 청원마을 한진아파트 809-1504

위의 디자인은 「디자인보호법」에 따라 디자인등록원부에 등록되었음을 증명합니다.
This is to certify that, in accordance with the Design Protection Act, the design has been registered at the Korean Intellectual Property Office.

2021년 10월 01일
특허청장
COMMISSIONER, KOREAN INTELLECTUAL PROPERTY OFFICE
김 용 래

디자인등록증
CERTIFICATE OF DESIGN REGISTRATION

등 록 Registration Number: 제 30-1130623 호

출원번호 Application Number: 제30-2020-0057782 호
출원일 Filing Date: 2020년 11월 26일
등록일 Registration Date: 2021년 10월 01일
등록의 구분 Type of Registration: 신 규 등 록 (EXAMINED REGISTRATION)
분류번호 Class: 제23류
디자인에 대상이 되는 물품 Product: 맹글밸브

디자인권자 Owner:
하이드로텍(주)(134511-*******)
경기도 화성시 마도면 석교남길 6-3

창작자 Creator:
성명(식별번호)(660118-*******)
경기도 성남시 분당구 정자동 191번지 청원마을 한진아파트 809-1504

위의 디자인은 「디자인보호법」에 따라 디자인등록원부에 등록되었음을 증명합니다.
This is to certify that, in accordance with the Design Protection Act, the design has been registered at the Korean Intellectual Property Office.

2021년 10월 01일
특허청장
COMMISSIONER, KOREAN INTELLECTUAL PROPERTY OFFICE
김 용 래

인정번호 : 제 15320 호

CLEAN 사업장 인정서

사업장명 : 하이드로텍㈜
대 표 자 : 유 성 열
소 재 지 : 경기도 화성시 마도면 송정리 107-12

귀 사업장을 안전하고 쾌적한 「CLEAN 사업장」으로 인정합니다.

2005년 6월 23일

노 동 부 장

한국산업안전공단 이사장

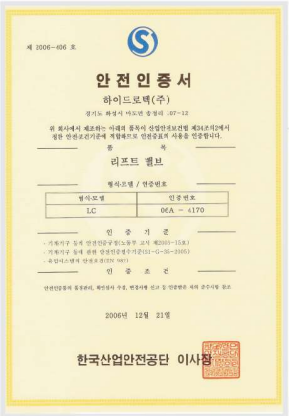

제 2006-406 호

안 전 인 증 서

하이드로텍(주)

경기도 화성시 마도면 송정리 107-12

위 회사에서 제조하는 아래의 품목이 산업안전보건법 제34조의2에서 정한 안전보건기준에 적합하므로 안전증표의 사용을 인증합니다.

종 류
리포트 팰브

형식모델 / 인증번호

형식모델	인증번호
LC	06A - 4170

인 증 기 준
- 기계기구 등에 관한 안전인증기준(노동부 고시 제2003-15호)
- 기계기구 등에 관한 안전인증기준기준(51-G-36-2005)
- 유압시스템에 관한 표준(KS B0161)

인 증 조 건
안전인증품에 품질관리, 제작상태 수정, 변경사항 신고 등 인증받은 자의 준수사항 참조

2006년 12월 23일

한국산업안전공단 이사장

제 2006-407 호

안 전 인 증 서

하이드로텍(주)

경기도 화성시 마도면 송정리 107-12

위 회사에서 제조하는 아래의 품목이 산업안전보건법 제34조의2에서 정한 안전보건기준에 적합하므로 안전증표의 사용을 인증합니다.

종 류
Power Pack

형식모델 / 인증번호

형식모델	인증번호	형식모델	인증번호
DA0401-MH	06A - 4171	T415M6-00	06A - 4175
31G12L-01	06A - 4172	T415M8-00	06A - 4176
31G12L-02	06A - 4173	T415M0-00	06A - 4177
31G12L-03	06A - 4174		

인 증 기 준
- 기계기구 등에 관한 안전인증기준(노동부 고시 제2003-15호)
- 기계기구 등에 관한 자율안전인증기준(51-G-36-2005)
- 산업용로봇제작자의 인증기준에 관한 기준(한국로봇산업협회KORIA CODE 2-11-06)
- 유압시스템의 성능표준(KS B0161)

인 증 조 건
자율안전품의 품질관리, 제작상태 수정, 변경사항 신고 등 인증받은 자의 준수사항 참조

2006년 12월 21일

한국산업안전공단 이사장

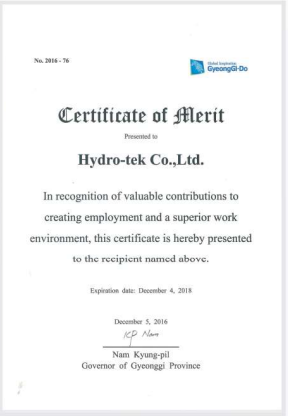

No. 2016 - 76

Certificate of Merit

Presented to

Hydro-tek Co.,Ltd.

In recognition of valuable contributions to creating employment and a superior work environment, this certificate is hereby presented to the recipient named above.

Expiration date: December 4, 2018

December 5, 2016

Nam Kyung-pil
Governor of Gyeonggi Province

ZERTIFIKAT ◆ CERTIFICATE ◆ 認証証書 ◆ СЕРТИФИКАТ ◆ CERTIFICADO ◆ CERTIFICAT

Attestation of Conformity
No. MBA 16 09 56080 013

Holder of Certificate: Hydro-Tek Co., Ltd.
8-3, Seokgyoram-gil, Mado-myeon
Hwaseong-si, Gyeonggi-do 18037
REPUBLIC OF KOREA

Product: Hydraulic Units (Hydraulic Power Pack)

Model(s): Hydro-Tek DC power pack

Parameters: Max. DC motor capacity: 3.0 kw; Max. working pressure: 210 bar; Max. flow rate: 25 liter/min

Tested according to: EN ISO 12100:2010; EN ISO 4413:2010; EN 60204-1:2006/A1:2009

This Attestation of Conformity is issued on a voluntary basis according to Council Directive 2006/42/EC relating to machinery. It confirms that the listed equipment (not Annex IV equipment) complies with the principal protection requirements of the directive. It refers only to the sample submitted to TÜV SÜD Product Service GmbH for testing and certification. See also notes overleaf.

Test report no.: MAE90105015/6

Date, 2016-09-23 (Yong-Sam Choi)

CE After preparation of the necessary technical documentation as well as the EC declaration of conformity the required CE marking can be affixed on the product. Other relevant directives have to be observed.

Page 1 of 1

TÜV SÜD Product Service GmbH · Zertifizierstelle · Ridlerstraße 65 · 80339 München · Germany

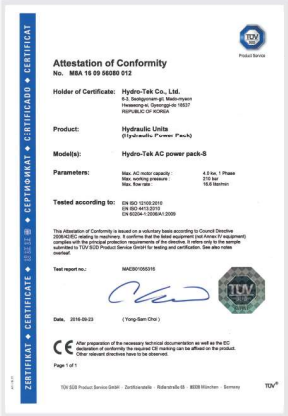

ZERTIFIKAT ◆ CERTIFICATE ◆ 認証証書 ◆ СЕРТИФИКАТ ◆ CERTIFICADO ◆ CERTIFICAT

Attestation of Conformity
No. MBA 16 09 56080 012

Holder of Certificate: Hydro-Tek Co., Ltd.
8-3, Seokgyoram-gil, Mado-myeon
Hwaseong-si, Gyeonggi-do 18037
REPUBLIC OF KOREA

Product: Hydraulic Units (Hydraulic Power Pack)

Model(s): Hydro-Tek AC power pack-S

Parameters: Max. AC motor capacity: 4.0 kw, 1-Phase; Max. working pressure: 210 bar; Max. flow rate: 16.6 liter/min

Tested according to: EN ISO 12100:2010; EN ISO 4413:2010; EN 60204-1:2006/A1:2009

This Attestation of Conformity is issued on a voluntary basis according to Council Directive 2006/42/EC relating to machinery. It confirms that the listed equipment (not Annex IV equipment) complies with the principal protection requirements of the directive. It refers only to the sample submitted to TÜV SÜD Product Service GmbH for testing and certification. See also notes overleaf.

Test report no.: MAE90105015/5

Date, 2016-09-23 (Yong-Sam Choi)

CE After preparation of the necessary technical documentation as well as the EC declaration of conformity the required CE marking can be affixed on the product. Other relevant directives have to be observed.

Page 1 of 1

TÜV SÜD Product Service GmbH · Zertifizierstelle · Ridlerstraße 65 · 80339 München · Germany

ZERTIFIKAT ◆ CERTIFICATE ◆ 認証証書 ◆ СЕРТИФИКАТ ◆ CERTIFICADO ◆ CERTIFICAT

Attestation of Conformity
No. MBA 16 09 56080 014

Holder of Certificate: Hydro-Tek Co., Ltd.
8-3, Seokgyoram-gil, Mado-myeon
Hwaseong-si, Gyeonggi-do 18037
REPUBLIC OF KOREA

Product: Hydraulic Units (Hydraulic Power Pack)

Model(s): Hydro-Tek AC power pack-T

Parameters: Max. AC motor capacity: 4.0 kw, 3-Phase; Max. working pressure: 210 bar; Max. flow rate: 16.6 liter/min

Tested according to: EN ISO 12100:2010; EN ISO 4413:2010; EN 60204-1:2006/A1:2009

This Attestation of Conformity is issued on a voluntary basis according to Council Directive 2006/42/EC relating to machinery. It confirms that the listed equipment (not Annex IV equipment) complies with the principal protection requirements of the directive. It refers only to the sample submitted to TÜV SÜD Product Service GmbH for testing and certification. See also notes overleaf.

Test report no.: MAE90105015/6

Date, 2016-09-23 (Yong-Sam Choi)

CE After preparation of the necessary technical documentation as well as the EC declaration of conformity the required CE marking can be affixed on the product. Other relevant directives have to be observed.

Page 1 of 1

TÜV SÜD Product Service GmbH · Zertifizierstelle · Ridlerstraße 65 · 80339 München · Germany

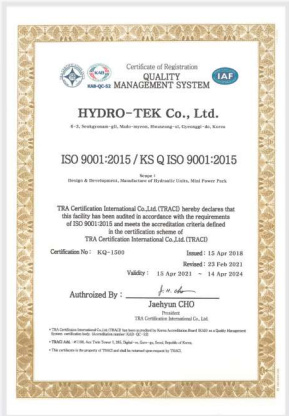

Certificate of Registration
QUALITY MANAGEMENT SYSTEM

HYDRO-TEK Co., Ltd.
8-3, Seokgyoram-gil, Mado-myeon, Hwaseong-si, Gyeonggi-do, Korea

ISO 9001:2015 / KS Q ISO 9001:2015

Scope :
Design & Development, Manufacture of Hydraulic Units, Mini Power Pack

TRA Certification International Co.,Ltd.(TRACI) hereby declares that this facility has been audited in accordance with the requirements of ISO 9001:2015 and meets the accreditation criteria defined in the certification scheme of TRA Certification International Co.,Ltd.(TRACI)

Certification No : KQ-1580
Issued : 15 Apr 2018
Revised : 23 Feb 2021
Validity : 15 Apr 2021 ~ 14 Apr 2024

Authroized By : Jaehyun CHO
President
TRA Certification International Co., Ltd.

* TRA Certification International Co.,Ltd.(TRACI) has been accredited by Korea Accreditation Board (KAB) as a Quality Management System certification body. Accreditation number: KAB 181-QM
* TRACI Add. : #1108, Ace Tech Tower 1, 281, Sagimi-ro, Giheung-gu, Seoul, Republic of Korea.
* The certificate is the property of TRACI and shall be returned upon request by TRACI.

[증서번호:0ZqQ9-aFOE-rCwF-JzIW] [작성일자:2014년 04월 28일]

제 20062428 호

기업부설연구소 인정서

1. 연 구 소 명: 하이드로텍(주)기술연구소
[소속기업명: 하이드로텍(주)]
2. 소 재 지: 경기도 화성시 마도면 석교남길 6-3
3. 신고 연월일: 2014년 4월 25일
[최초인정일 : 2006년 6월 4일]

미래창조과학부

「기초연구진흥 및 기술개발지원에 관한 법률」 제14조, 같은 법 시행령 제16조제1항 및 제27조제1항에 따라 위와 같이 기업부설연구소로 인정합니다.

2014년 4월 28일
한국산업기술진흥협회장

Certificate of Quality Approval Issue 2

DAS CERTIFICATION

QUALITY MANAGEMENT SYSTEM
Certificate of Approval

This is to certify that the quality management system of

HYDRO-TEK CO., LTD.

8107-12 Seokgyoram-gil, Mado-myeon, Hwaseong-si, Gyeonggi-do, Korea

Has been assessed and found to meet the requirements of :

ISO 9001:2000 / KS A 9001:2001

The certificate is valid for the following scope of operation:

Design, Development, Manufacture and Service of Hydraulic Units, (Hydraulic Power Pack).
Non-EA, 18, Machinery and equipment

Date of Certificate issue: 04-February-2006
Certificate Valid until: 04-February-2009
(Subject to Surveillance)

Authorised

Date 04-February-2006

DAS CERTIFICATION Ltd.
Registered Address: [illegible]
Telephone: [illegible]
Registered FAX: [illegible]
Email: info@dascertification.co.uk
Web: www.dascertification.co.uk

IAF Registered ISO 9001:2000 UKAS

EC Declaration of Conformity
according to EC Machinery Directive 98/37/EC, Annex II A

We herewith declare: **Hydro-Tek Co., Ltd.**
187-13, Sonojung-Ri, Mado-Myun, 445-862, Hwasung-shi, Kyunggi-Do, KOREA

that the following machine complies with the appropriate basic safety and health requirements of the EC Directive based on its design and type, as brought into circulation by us. In case of alteration of the machine, not agreed upon by us, this declaration will lose its validity.

Machine Description: Hydraulic Power Pack

Machine Type: Hydro-Tek DC power pack

Serial Number:

Applicable EC Directive: Machinery Directive (98/37/EC)
EMC Directive (89/336/EEC)

Applicable Harmonized Standards:
EN ISO 12100-1:2003
EN ISO 12100-2: 2003
EN 982:1996
EN 60204-1:2006

Date/ Authorized Signature: .....

Title of Signatory: HYDRO-TEK CO.,LTD.
PRESIDENT SUNG RYUL, YOO
187-13, SONOJUNG-RI, MADO-MYUN
HWASUNG-SHI, KYUNGGI-DO, SOUTH KOREA

MAR. 23. 2007

EC Declaration of Conformity
according to EC Machinery Directive 98/37/EC, Annex II A

We herewith declare: **Hydro-Tek Co., Ltd.**
187-13, Sonojung-Ri, Mado-Myun, 445-862, Hwasung-shi, Kyunggi-Do, KOREA

that the following machine complies with the appropriate basic safety and health requirements of the EC Directive based on its design and type, as brought into circulation by us. In case of alteration of the machine, not agreed upon by us, this declaration will lose its validity.

Machine Description: Hydraulic Power Pack

Machine Type: Hydro-Tek AC power pack-S

Serial Number:

Applicable EC Directive: Machinery Directive (98/37/EC)
EMC Directive (89/336/EEC)

Applicable Harmonized Standards:
EN ISO 12100-1:2003
EN ISO 12100-2: 2003
EN 982:1996
EN 60204-1:2006

Date/ Authorized Signature: .....

Title of Signatory: HYDRO-TEK CO.,LTD.
PRESIDENT SUNG RYUL, YOO
187-13, SONOJUNG-RI, MADO-MYUN
HWASUNG-SHI, KYUNGGI-DO, SOUTH KOREA

MAR. 23. 2007

EC Declaration of Conformity
according to EC Machinery Directive 98/37/EC, Annex II A

We herewith declare: **Hydro-Tek Co., Ltd.**
187-13, Sonojung-Ri, Mado-Myun, 445-862, Hwasung-shi, Kyunggi-Do, KOREA

that the following machine complies with the appropriate basic safety and health requirements of the EC Directive based on its design and type, as brought into circulation by us. In case of alteration of the machine, not agreed upon by us, this declaration will lose its validity.

Machine Description: Hydraulic Power Pack

Machine Type: Hydro-Tek AC power pack-"

Serial Number:

Applicable EC Directive: Machinery Directive (98/37/EC)
EMC Directive (89/336/EEC)

Applicable Harmonized Standards:
EN ISO 12100-1:2003
EN ISO 12100-2: 2003
EN 982:1996
EN 60204-1:2006

Date/ Authorized Signature: .....

Title of Signatory: HYDRO-TEK CO.,LTD.
PRESIDENT SUNG RYUL, YOO
187-13, SONOJUNG-RI, MADO-MYUN
HWASUNG-SHI, KYUNGGI-DO, SOUTH KOREA

MAR. 23. 2007

CERTIFICATE

This is to certify that Hydro-Tek Co Ltd

represented by Sung Ryul, Yoo has been designated as a

Promising Export Firm by the Small & Medium

Business Administration, Republic of Korea

Certificate No : 2013- 100 Certified Date : 2013. 6. 1
Issue Date : 2013. 6. 1 Expiry Date : 2015. 5.31

KIM JONG GOOK
Authorized Local Signatory

Gyeonggi Export Center, SMBA

MINISTRY OF TRADE, INDUSTRY & ENERGY

제 115860 호

표 창 장

하이드로텍㈜

귀사는 한·일 협력 사업을 통하여 양국의 산업기술 발전과 교류협력 증진에 공헌한 바 크므로 제9회 한일산업기술 FAIR를 맞이하여 표창함

2016년 10월 27일

산업통상자원부장관
주 형 환

Customer World Map / 해외 고객 분포

37 Countries include U.S.A / Germany / Japan / Canada

Hydro-Tek®

KOREA

Address : 6-3, Seokgyonam-gil, Mado-myeon, Hwaseong-si, Gyeonggi-do, South Korea (18537)
Overseas sales TEL : +82 70 4900 0658
Web site : www.hydro-tek.com
E-mail : sales@hydro-tek.com

본사 : 경기도 화성시 마도면 석교남길 6-3 (우:18537)
FAX : 031) 355-1861
Web site : www.hydro-tek.com
E-mail : korean.sales@hydro-tek.com
국내영업부 TEL : 031) 355-1857

부산사무소 : 부산광역시 강서구 과학산단로 483 (우:46742)
TEL : 051) 831-9570 FAX : 051) 831-7880

YouTube

Hydro-Tek	회사 영상	Products / 제품영상
English	한국어	English