LINK**LIFT**

2024 EDITION

Revolutionizing
vertical load transfer

Where **smoothness**
meets **efficiency**

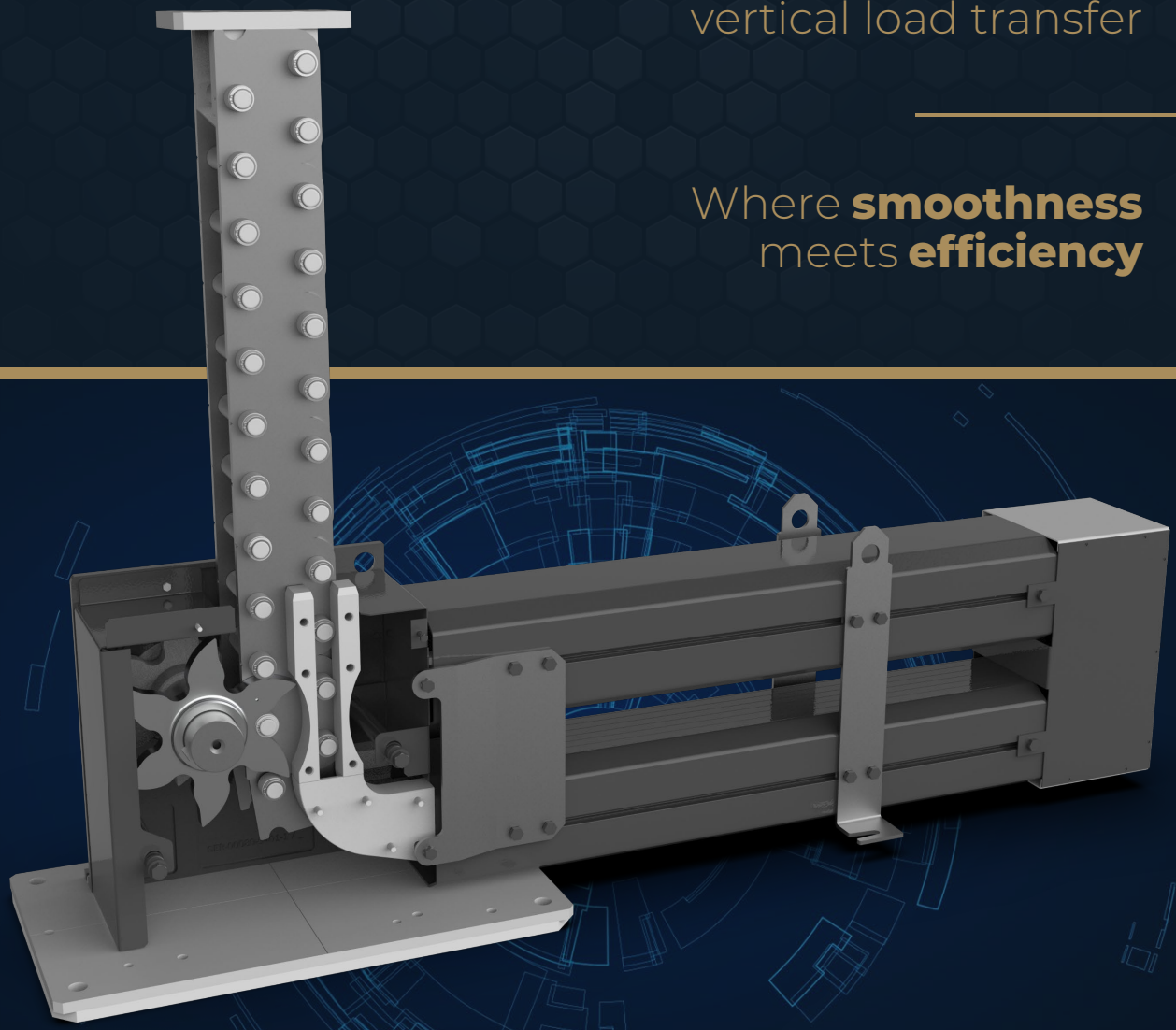

SERAPID

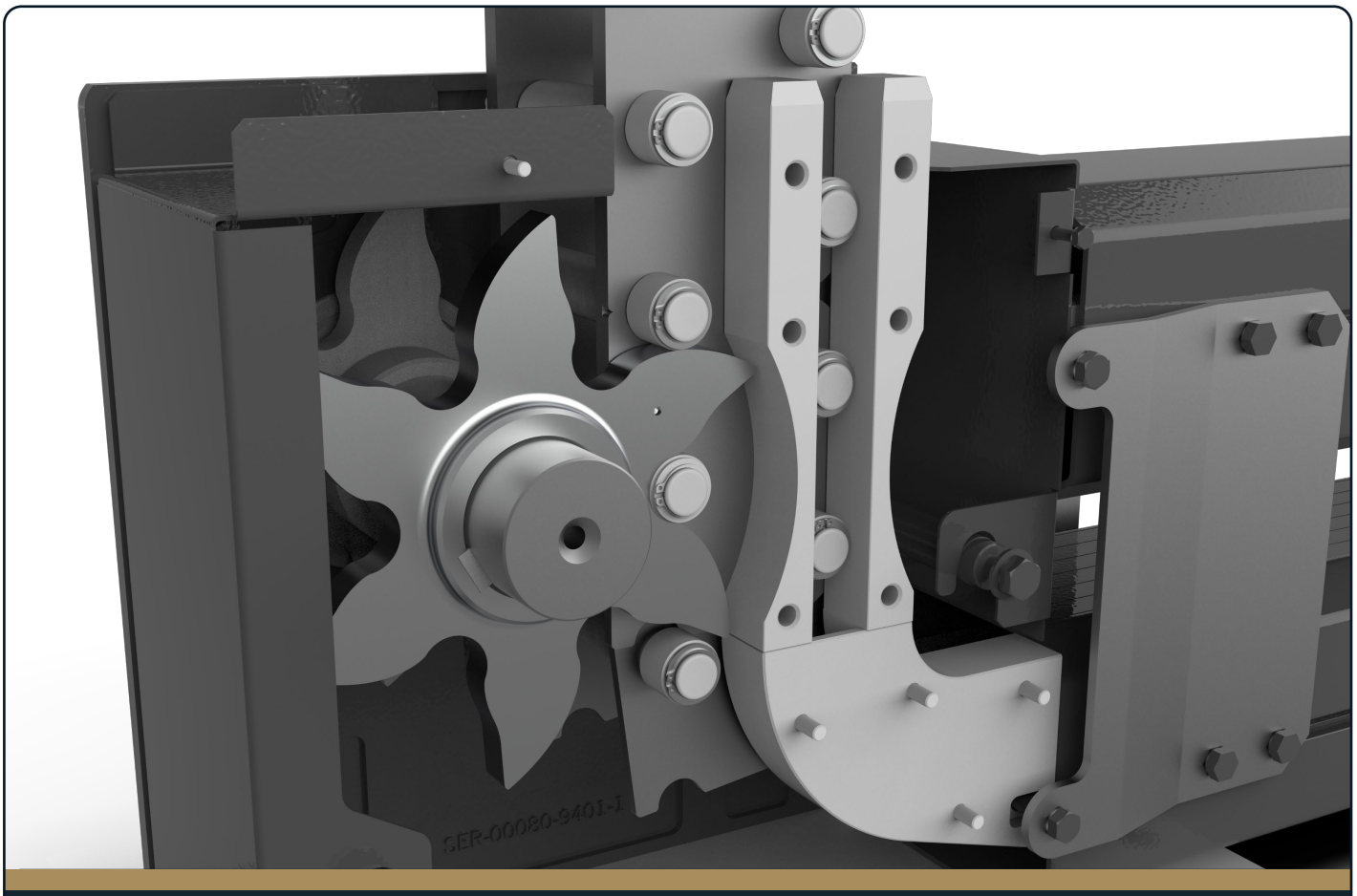

SERAPID

LEVERAGING EXCELLENCE

COMPACT

Shallow Pit Compatible

PRECISE

Accurate & Repeatable Positioning

ROBUST

High Reliability & Low Maintenance

GREEN

High Energy Efficiency

TABLE OF **CONTENTS**

SERAPID

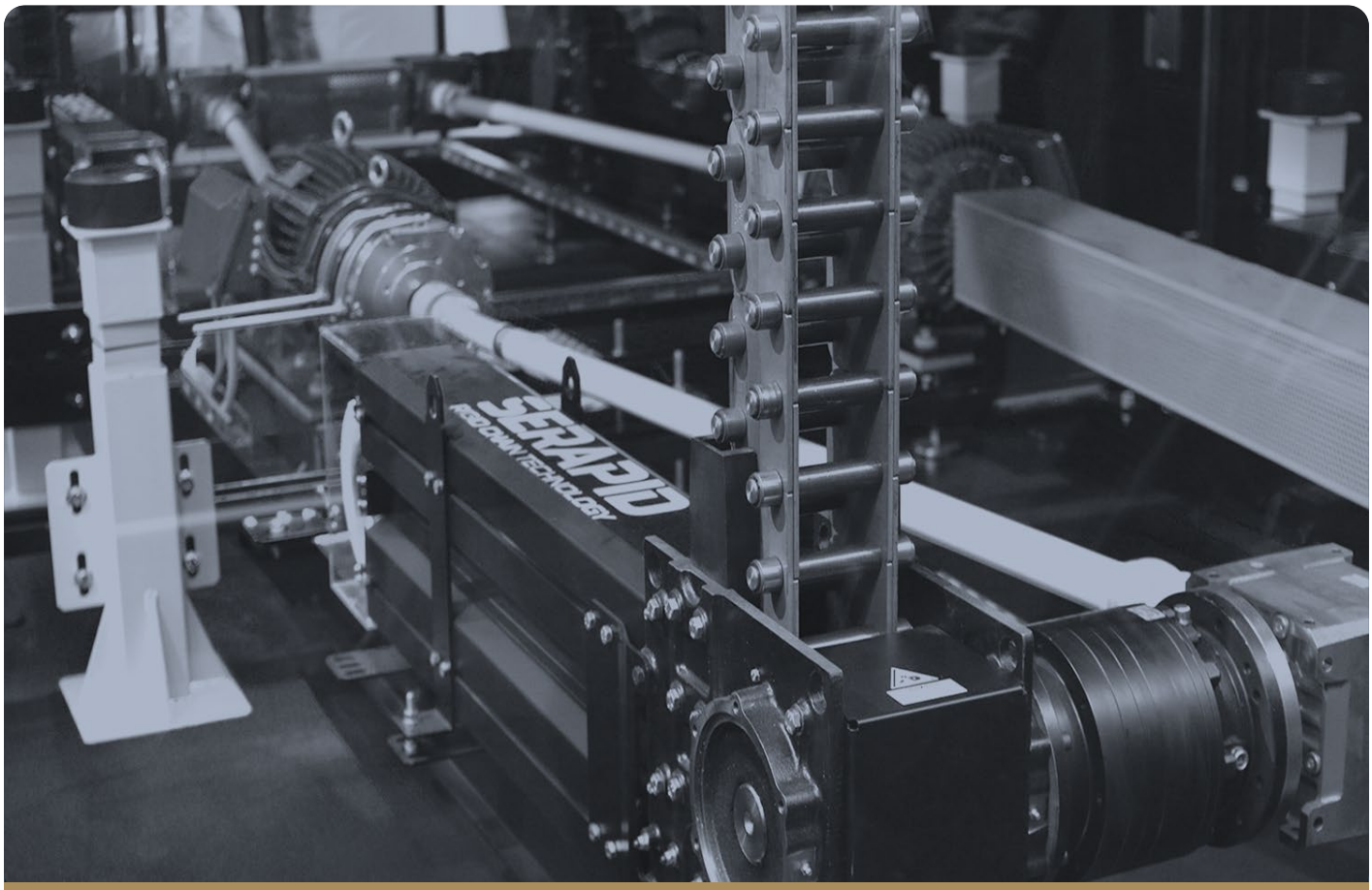

OVERVIEW

LINKLIFT BASICS

RIGID CHAIN TECHNOLOGY

LINKLIFT PERFORMANCE

DESIGN & DEVELOPMENT

3RD GENERATION LINKLIFT

SERAPID

Experience the perfect balance of power and finesse with SERAPID's LINKLIFT product line.

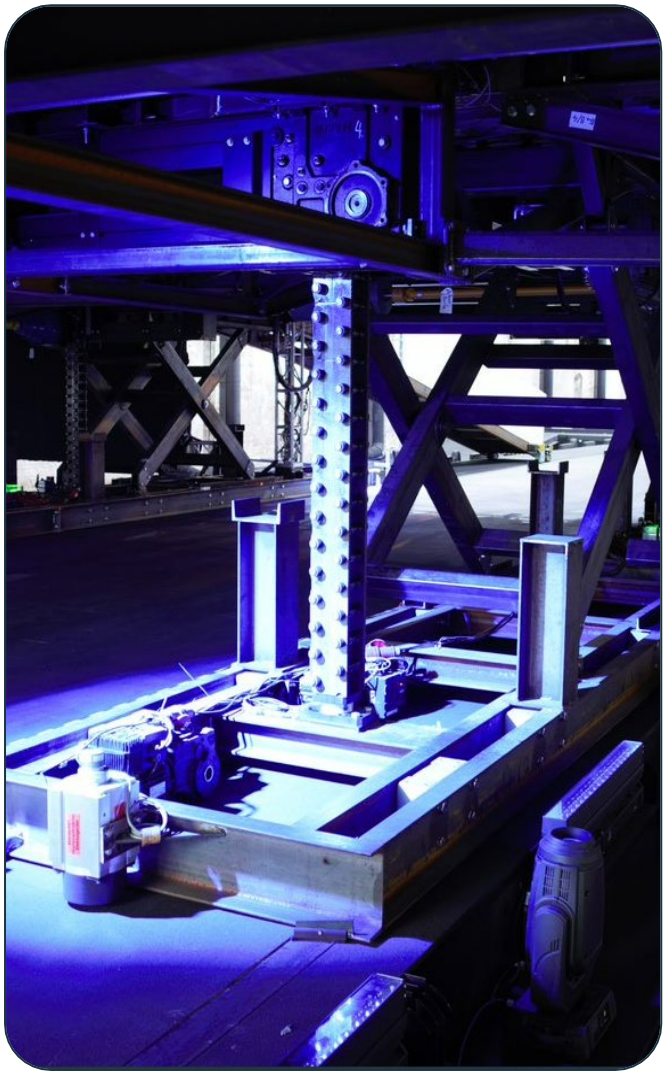

The LinkLift has been specially designed to lift heavy loads over long travel distances. SERAPID's proprietary technology presents a highly practical and optimal solution, particularly in complex situations. Whether you require smooth and controlled movements in theaters, industrial environments, or any other application that demands precise vertical positioning and stability, the LinkLift system with Rigid Chain Technology delivers unmatched performance and efficiency in vertical transportation solutions.

Engineered to surpass traditional lifting methods, the LinkLift system provides seamless vertical motion, effortlessly handling heavy loads with utmost efficiency. This technology offers the advantages of other drive mechanisms (such as hydraulic cylinders, spindles, and belts) without the disadvantages. The LinkLift is driven by multiple sprockets and uses guides to ensure that the links lock in place during movement. As a result, a telescopic lifting column of exceptional stability and rigidity is produced.

RIGID CHAIN TECHNOLOGY

Elevate your engineering capabilities with the versatility of SERAPID's proprietary technology.

Rigid Chain Technology (RCT), as implemented in SERAPID's LinkLift system, operates on the principle of interconnected links working together to form a solid and rigid structure. Each link within the chain is meticulously engineered for optimal performance.

When the system is activated, the chain smoothly and seamlessly extends, creating a continuous and unyielding column. This extension process is achieved through the mechanical movement of individual interlocking links, which are then guided via guides for precision movement. When retracted, the chain is stored in a compact magazine .

SERAPID chain links have been engineered with gravity at the exact geometric center. The result is a robust and reliable lifting and positioning mechanism capable of withstanding significant loads while maintaining exceptional stability and accuracy. RCT empowers engineers with a versatile solution that for a wide range of applications, offering unparalleled strength, precision, and durability.

LINKLIFT PERFORMANCE

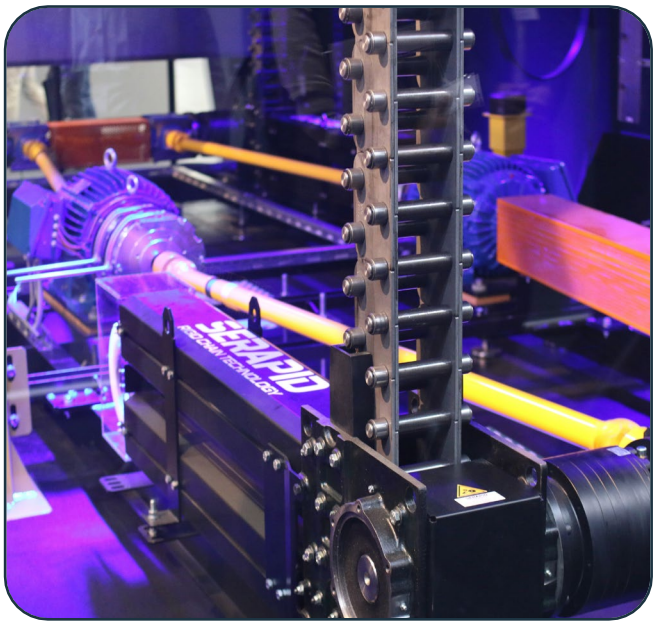

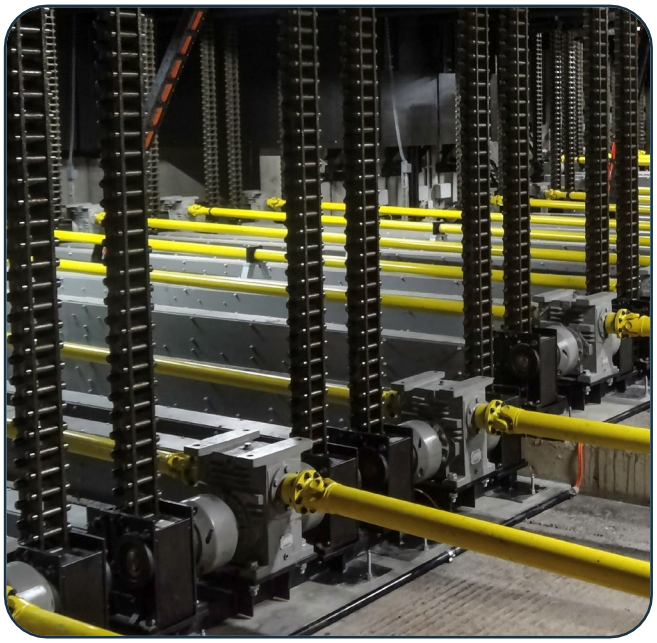

Advantages of the SERAPID LinkLift:

- Positioning control accuracy in the millimeter, even at high speeds
- Payload per lifting column up to 15 t dynamic, up to 20 t static
- Up to vertical travel/stroke of approx. 50 m when actively guided (see options page 14)
- Maximum vertical travel up to 18 m with intermediate frames (see options page 14)
- Unguided lifting path up to 8 m
- Standard speeds up to 300 mm/s, higher speeds on demand
- High stability and load resistance
- No bouncing of load, permanent holding of the approached position
- Proven in a wide range of applications
- Low maintenance, long service life
- Cost-effective / high efficiency (≥80%)
- Application-specific designs, system engineering and complete solutions

POWERED BY SERAPID

DESIGN & DEVELOPMENT

Reinventing the loads handling industry through continuous innovation: SERAPID's outstanding R&D sets the standard for cutting-edge technology.

The LinkLift has received numerous awards worldwide since its market launch in 1999 and has now grown to a product line of 8 different models. In 2009, the LinkLift 2 was released with improved lifting capacities, optimization of the sprocket and a modular magazine system.

SERAPID has now further developed the product line to include the compact LinkLift 30LT (low trim, on-demand only), and the new third generation LinkLift, commanding even stricter noise, service life and speed requirements.

The LinkLift is capable of transporting payloads up to 200 kN per lifting column, with stroke capacity ranging from 8 m for unguided loads to 18 m using intermediate frames. Distances up to 50 m are possible for lifts equipped with wall guides. **Contact our team for specific limits**.

Innovative options such as maintenance blocks, integrated load measurement, and a variety of guides allow for custom solutions to almost any linear motion challenge especially for extremely heavy loads and challenging environments.

LINKLIFT 3RD GENERATION
OPTIMIZED PERFORMANCE

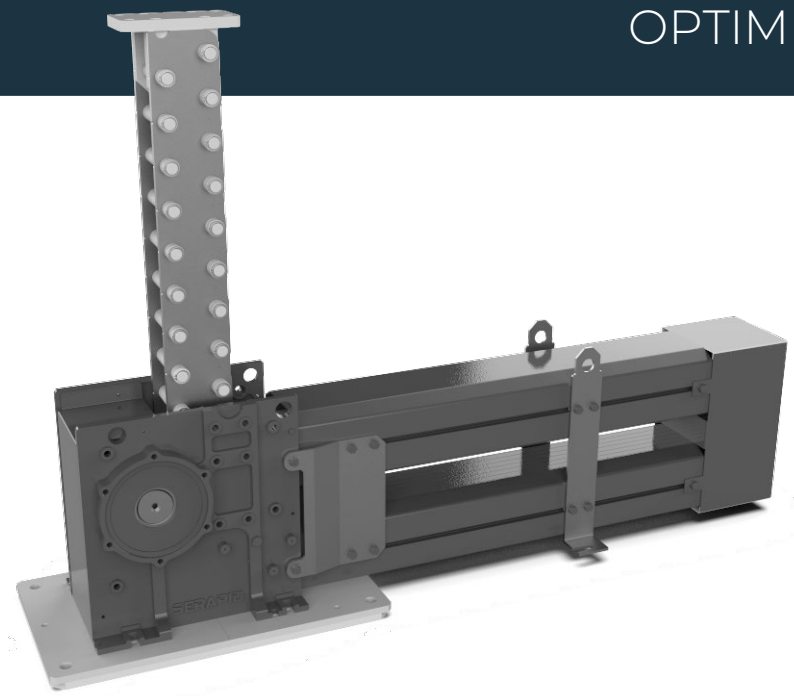

UP TO **20%**
REDUCED VIBRATION
AT HIGH SPEEDS

THE NEW LINKLIFT

SERAPID has been consistently innovating and improving products to achieve the highest performance possible for over 50 years.

This dedication to innovation has resulted in the development of the most recent design, the 3rd generation LinkLift, which boasts up to 20% reduced vibration at high speeds.

3rd generation LinkLift now available in these models:

LL50 - LL80 - LL100

Extension Acceleration RMS

Wb Weighting filter

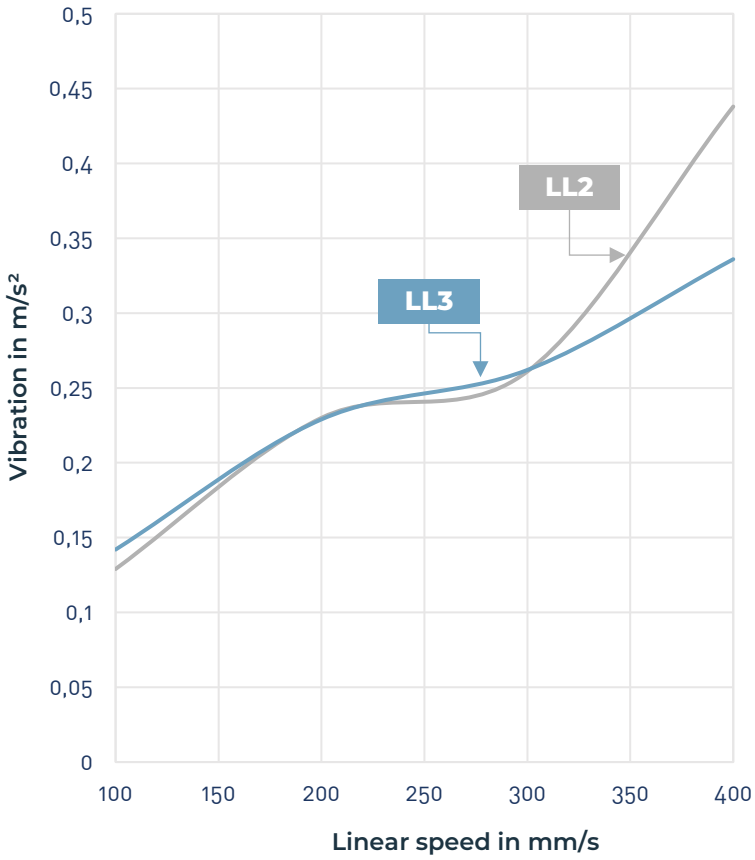

UPDATED ENGINEERING

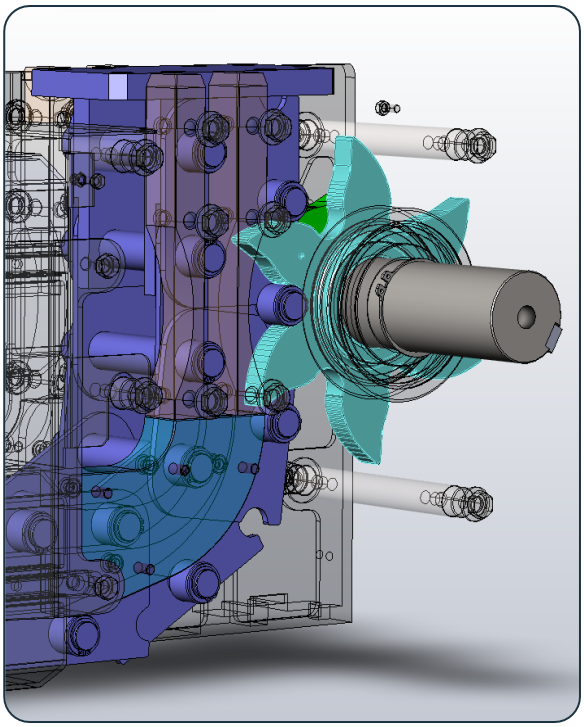

NEW PATENTED SPROCKET DESIGN

The new "shuriken" sprocket has been specially designed by our engineering team, leveraging cutting-edge technology to deliver superior mechanical performance, placing the LinkLift firmly ahead of the competition.

This sprocket provides a better grip on the drive chain, reducing wear on the system while increasing durability and efficiency. It also confers smoother operation, resulting in lower vibration and noise at high speeds.

The LinkLift 3 can operate at higher speeds than previous models, improving productivity and decreasing cycle times. The enhanced efficiency and greater precision throughout the speed range provide a safer and more comfortable ride.

UPDATED FEATURES

The LinkLift's new baseplate has been designed to increase productivity, saving time and money during scheduled maintenance. The design has been altered, making key components easier to access for faster maintenance and repairs.

Standardized surface area markings make it easier to align and secure the drive assembly in place during installation. This reduces the time required for setup and ensures a more stable install, which can reduce vibration levels.

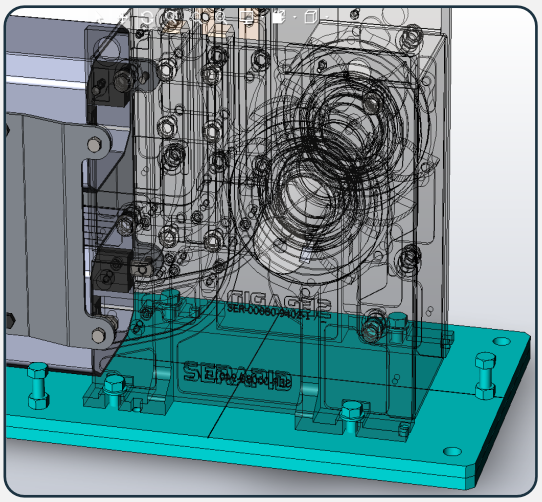

POWERED BY SERAPID

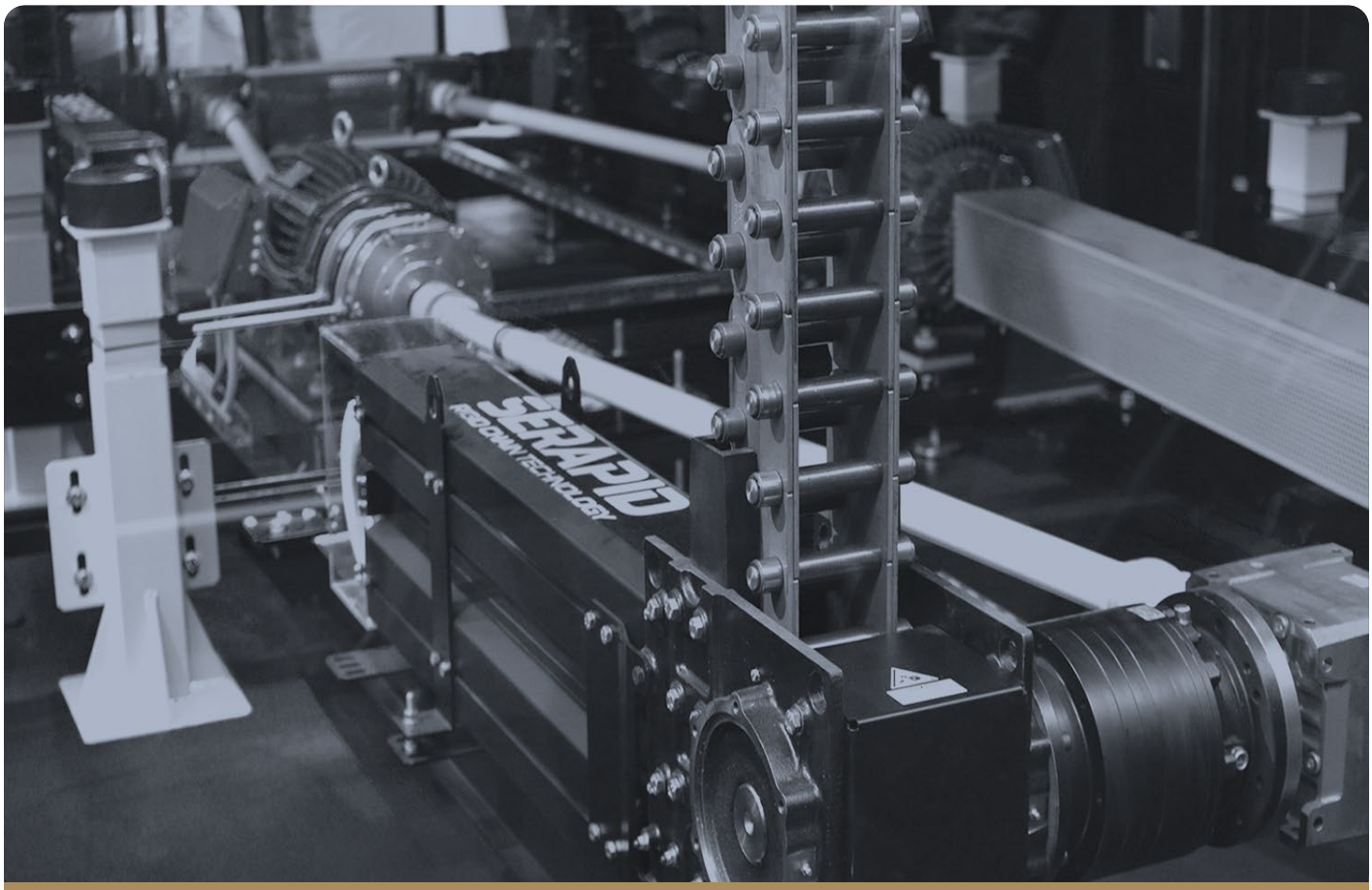

INDUSTRY **SPECIFICATIONS**

THEATRE & STAGE LIFTS

TYPICAL AND CODE COMPLIANT SETUPS

INDUSTRIAL LIFTS

TYPICAL AND CODE COMPLIANT SETUPS

SERAPID

THEATRE & STAGE LIFT
CONFIGURATIONS

The SERAPID LinkLift has been the gold standard in show lifts for over 20 years.

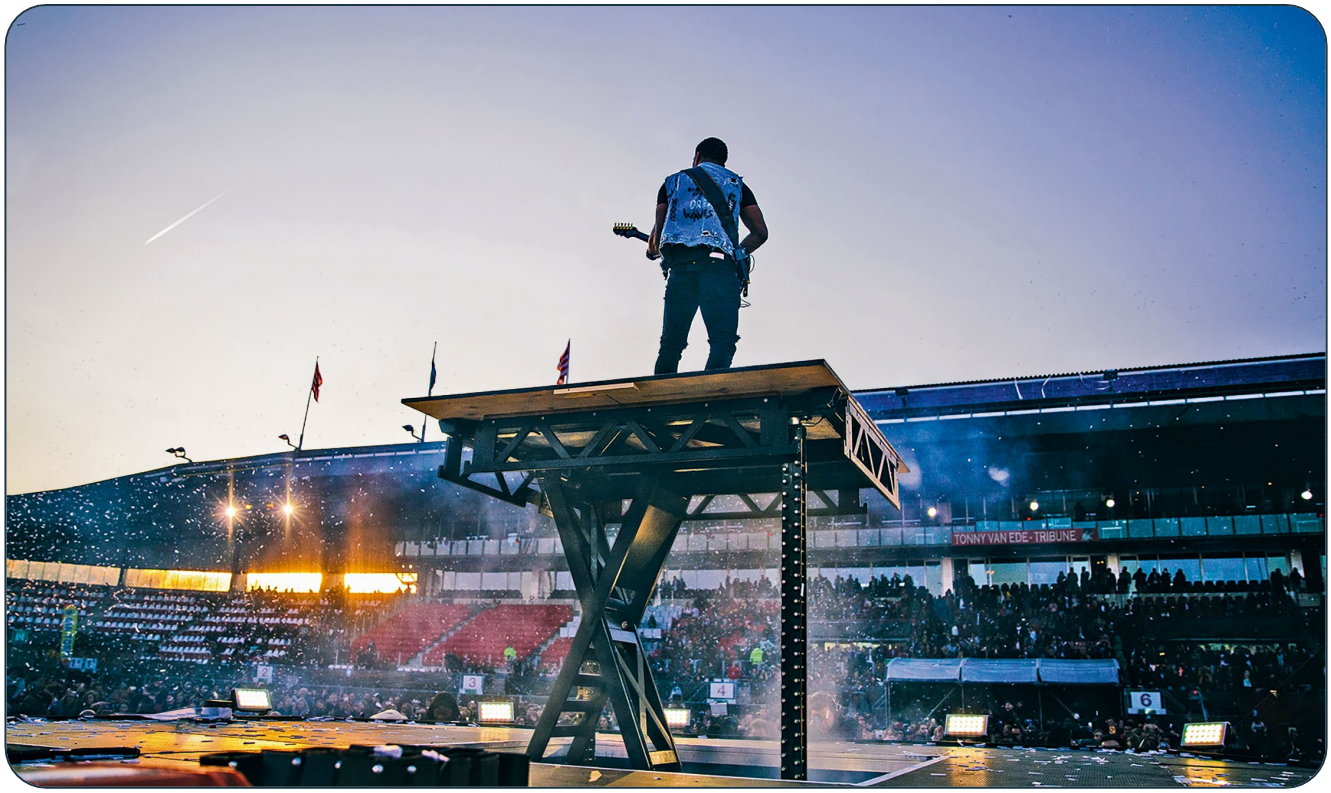

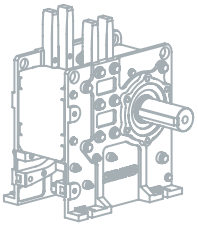

TURN-KEY & CODE COMPLIANT SYSTEMS

SERAPID is trusted for smooth, quiet & reliable lift configurations in the stage, theater, and large venue industries. Our lift systems comply with EN17206 regulations, and can be designed with any number of LinkLifts, whether it's 4, 6 or 40. SERAPID is a one-stop-shop for lift systems, offering design, engineering, assembly and installation of jobs.

POWERED BY SERAPID

LINKLIFT ASSEMBLY

TYPICAL EN17206 COMPLIANT STAGE SET-UP

4 LINKLIFT – STANDARD INSTALLATION FOR THEATER LIFTS

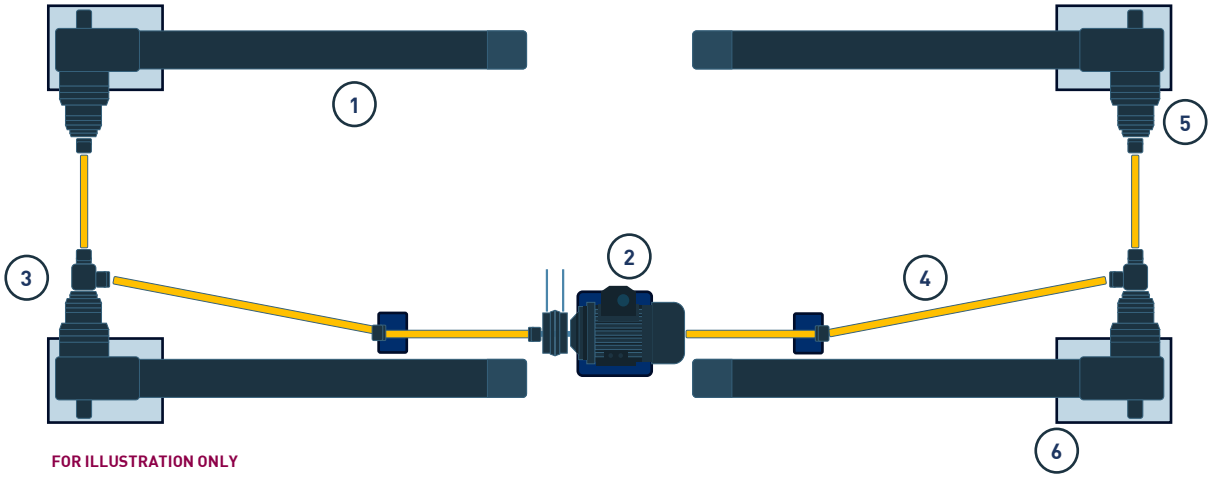

FOR ILLUSTRATION ONLY

6 LINKLIFT – STANDARD INSTALLATION FOR THEATER LIFTS

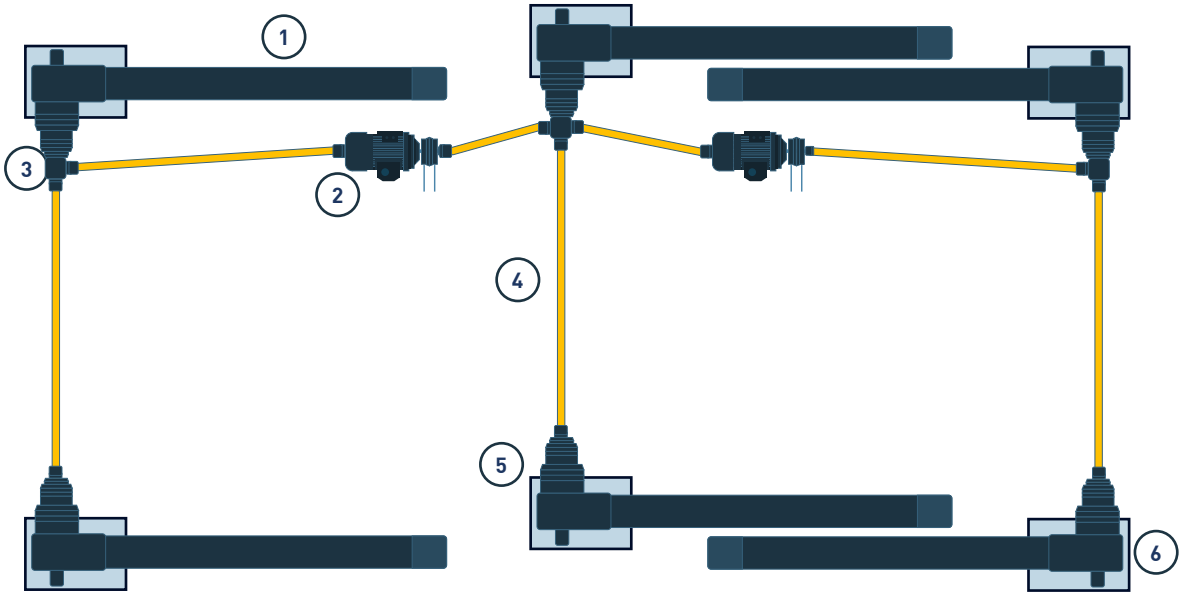

FOR ILLUSTRATION ONLY

1. LinkLift **2.** Motor with Single or Double Brake **3.** Bevel Gear Box

4. Cardan Shaft **5.** Planetary Gear Box **6.** Mounting Plates

***Additional units may be added as needed.**

SERAPID handling and freight lifts offer high load capacity & precision movement.

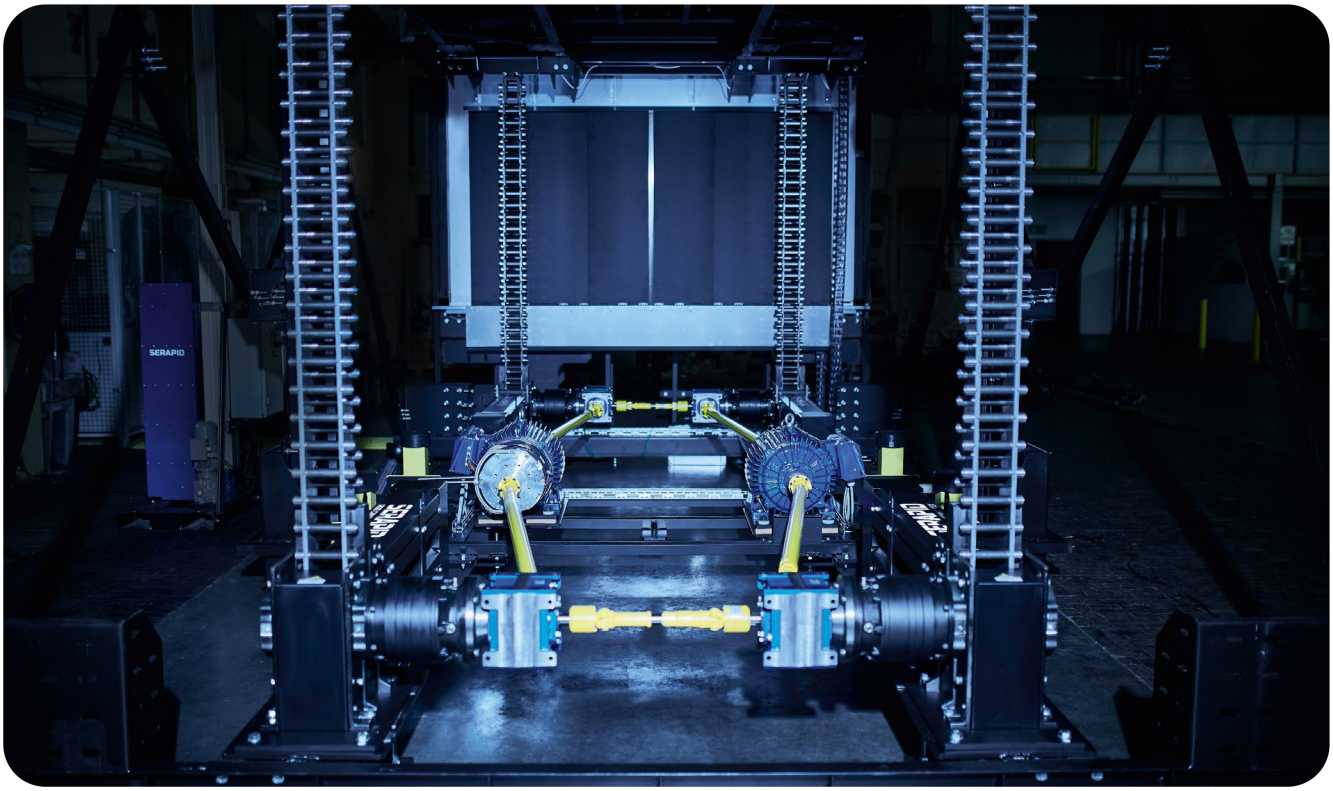

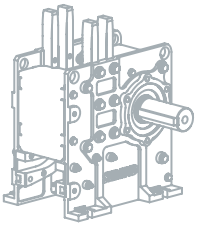

TURN-KEY & CODE COMPLIANT SYSTEMS

SERAPID provides precision movement of high load capacities in the freight, industrial handling and manufacturing industries. Our turn-key lift systems always comply with EN81 and/or Machine Directive regulations. SERAPID is a one-stop-shop for lift systems, offering design, engineering, assembly and installation of jobs.

LINKLIFT ASSEMBLY
EN81 COMPLIANT CLOSED-LOOP SYSTEM

4 LINKLIFT – STANDARD INSTALLATION FOR INDUSTRIAL LIFTS

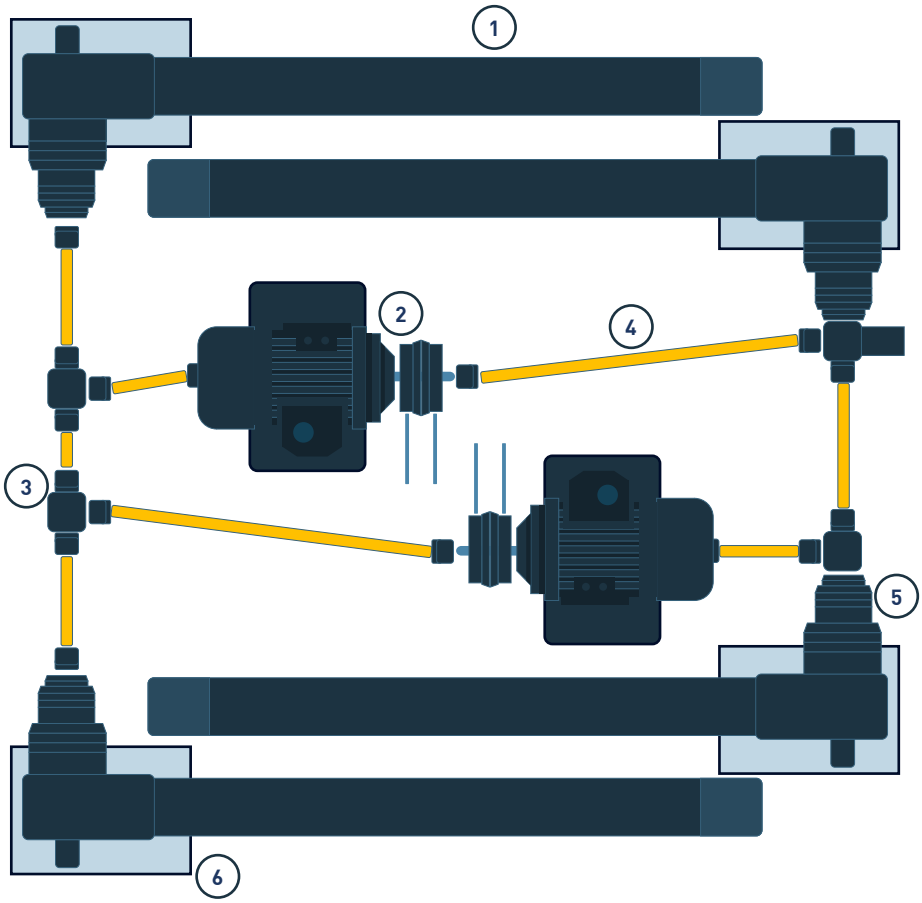

FOR ILLUSTRATION ONLY

1. LinkLift **2.** Motor with Single or Double Brake **3.** Bevel Gear Box
4. Cardan Shaft **5.** Planetary Gear Box **6.** Mounting Plates

***Additional units may be added as needed.**

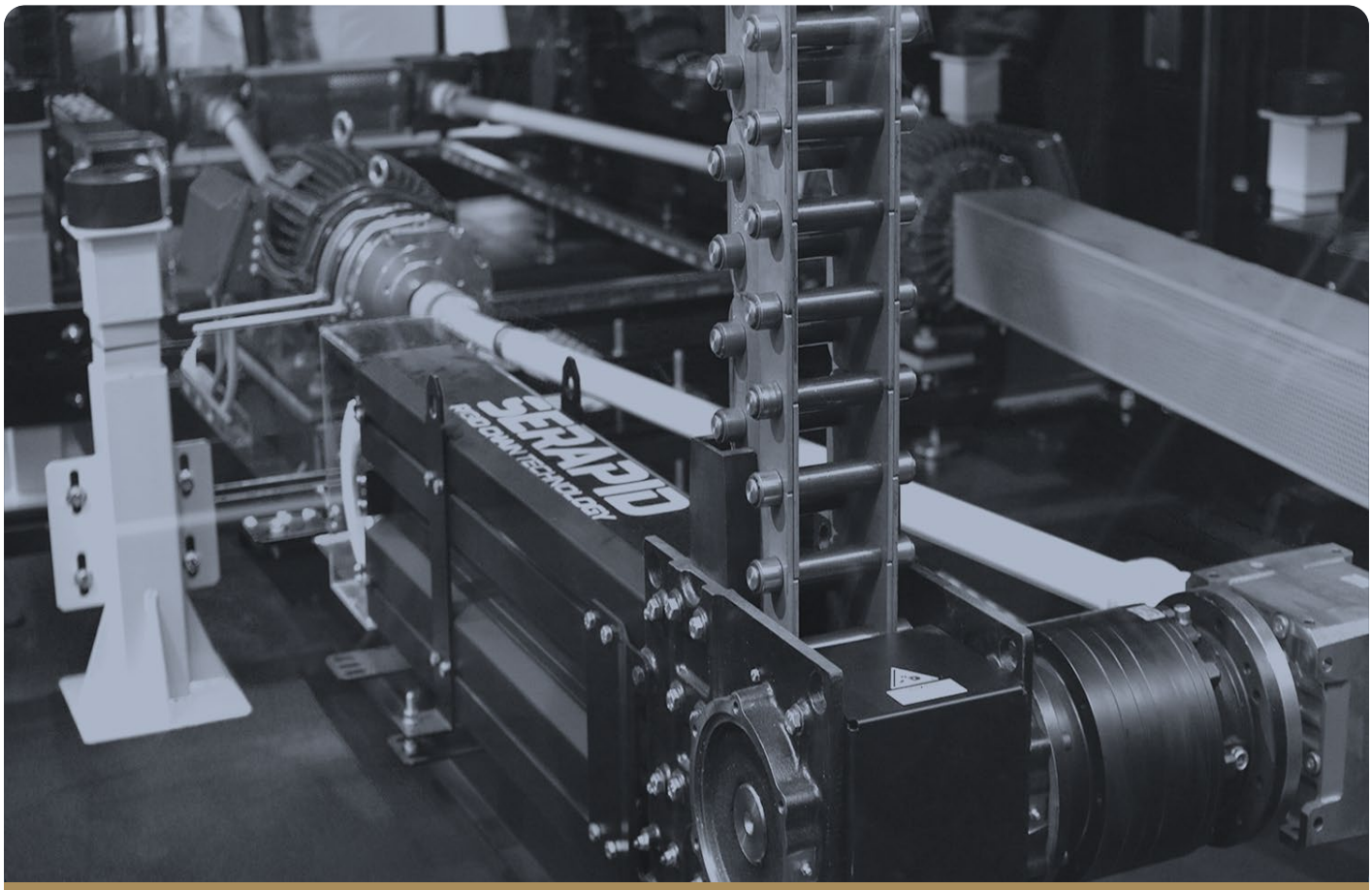

OPERATIONAL **DATA**

STROKE CAPACITIES

LOAD CAPACITIES

LOAD CAPACITY CHARTS

SERAPID

STROKE CAPACITIES

MAXIMUM VERTICAL STROKE

The maximum stroke of the LinkLift depends on several factors such as chain size, payload weight, stroke distance and lift speed (see static and dynamic capacity charts). Engineering consultation will be required to determine the specifics of your project.

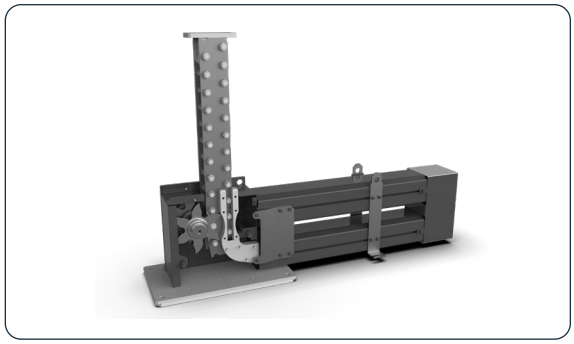

8 METERS

BASIC CONFIGURATION

Normal LinkLift operation with short or long reaction plates.

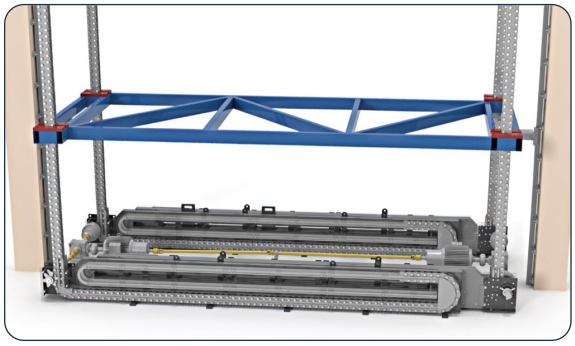

18 METERS

+ INTERMEDIATE FRAMES

1-2 braced frames increase rigidity for longer stroke lengths.

50 METERS*

WALL-GUIDED LOAD
WITH CHAIN GUIDES

Guides are fixed to the wall and guide the load and chains along the path.

*Contact us for specific requirements.

LOAD CAPACITIES
CHOOSING THE RIGHT LINKLIFT

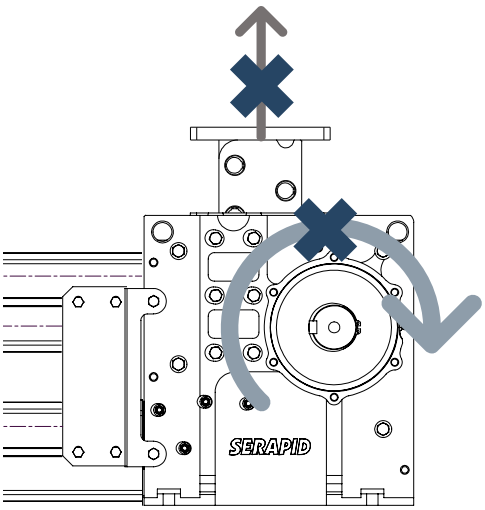

STATIC
(platform not in motion)

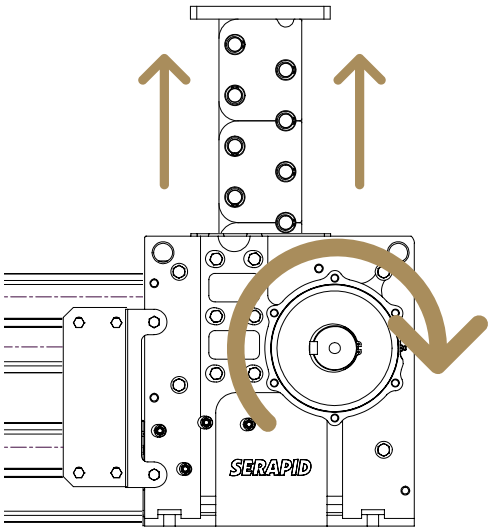

DYNAMIC
(platform in motion)

MODEL	LL30	LL50	LL50R	LL80	LL80R	LL100	LL100R
STATIC CAPACITY							
Max. Load per Column [kN]	20	50	70	100	125	130	200
Stroke Limit [m]	1.9	2	1	3.5	2	6	3.5
Max Stroke [m]	1.9	4	4	6.4	6.4	8	8
Load Limit per Column [kN]	20	10	10	40	40	70	70
DYNAMIC CAPACITY							
Max Load per Column [kN]	10	15	30	50	90	75	150
Stroke Limit [m]	1.9	3.5	3	6	4	7.5	5
Max Stroke [m]	1.9	4	4	6.4	6.4	8	8
Load Limit per Column [kN]	10	10	10	40	40	70	70

LOAD CAPACITIES
WITH AND WITHOUT INTERMEDIATE FRAMES

FOR ILLUSTRATION ONLY - UNCONTROLLED IF DOWNLOADED OR PRINTED - NOT APPROVED FOR OPERATIONAL USE

LINKLIFT **STATIC CAPACITY**

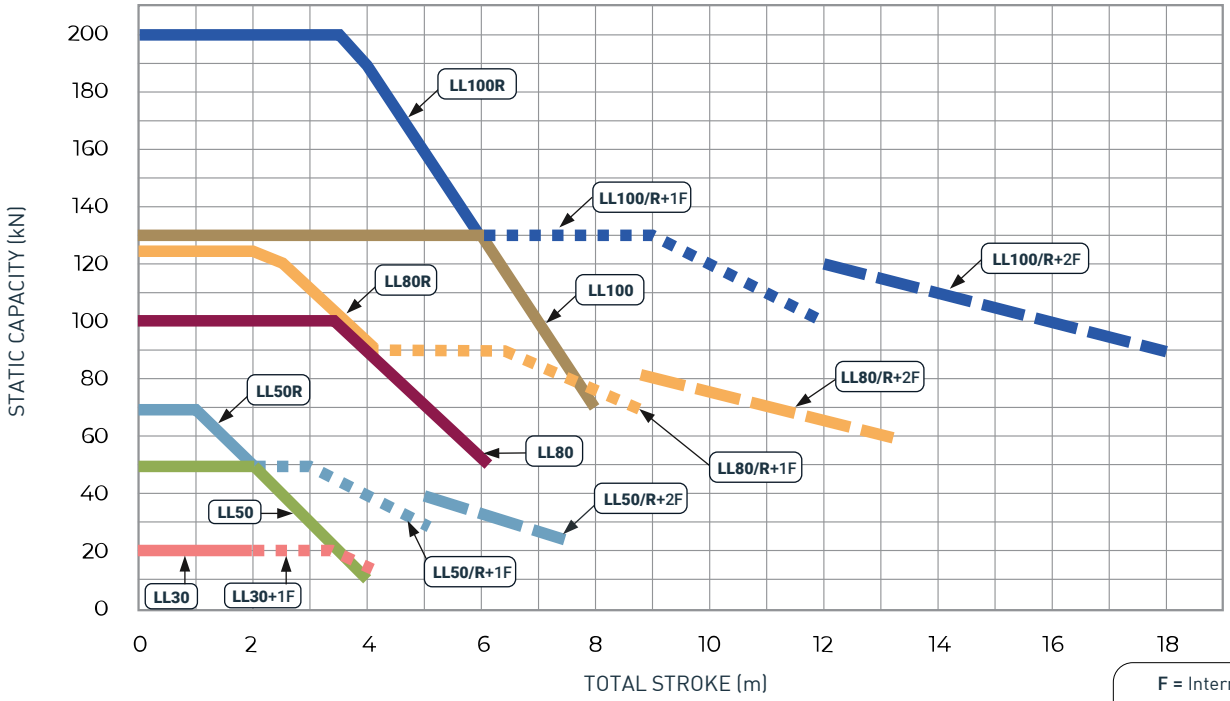

F = Intermediate Frame

= Long Reaction Plates Required

LINKLIFT **DYNAMIC CAPACITY**

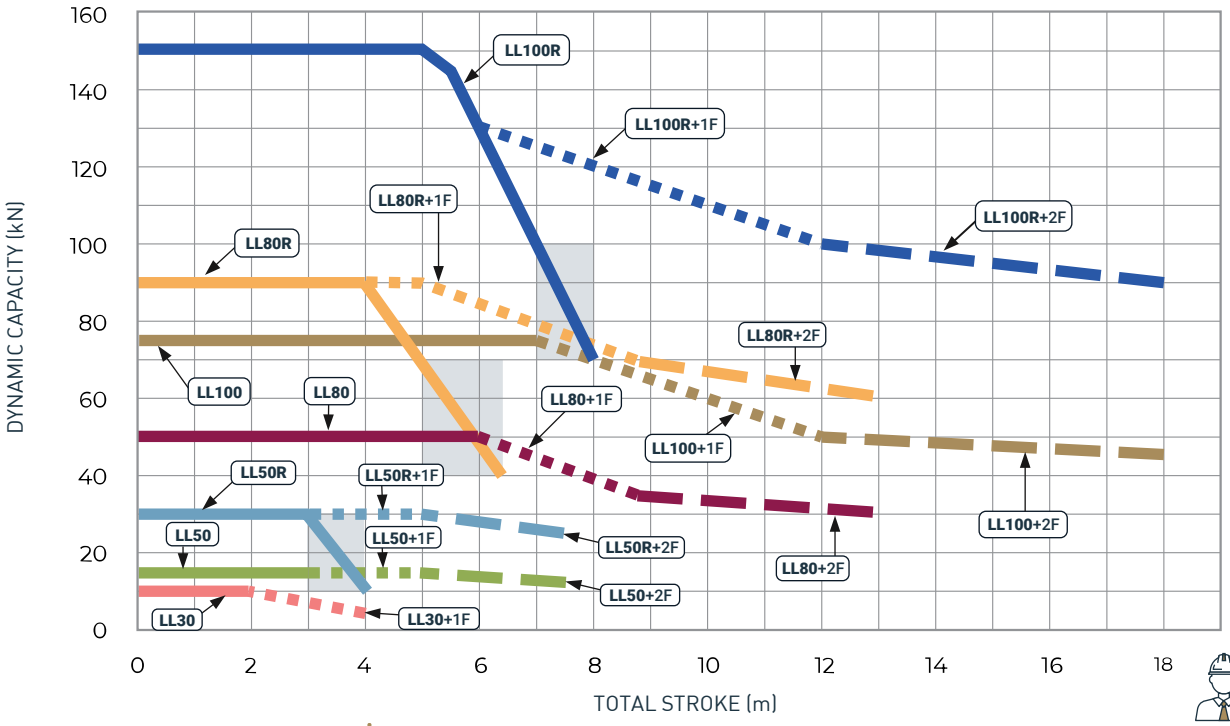

EN81 + EN17206 Safety factor included.
No further correction required.

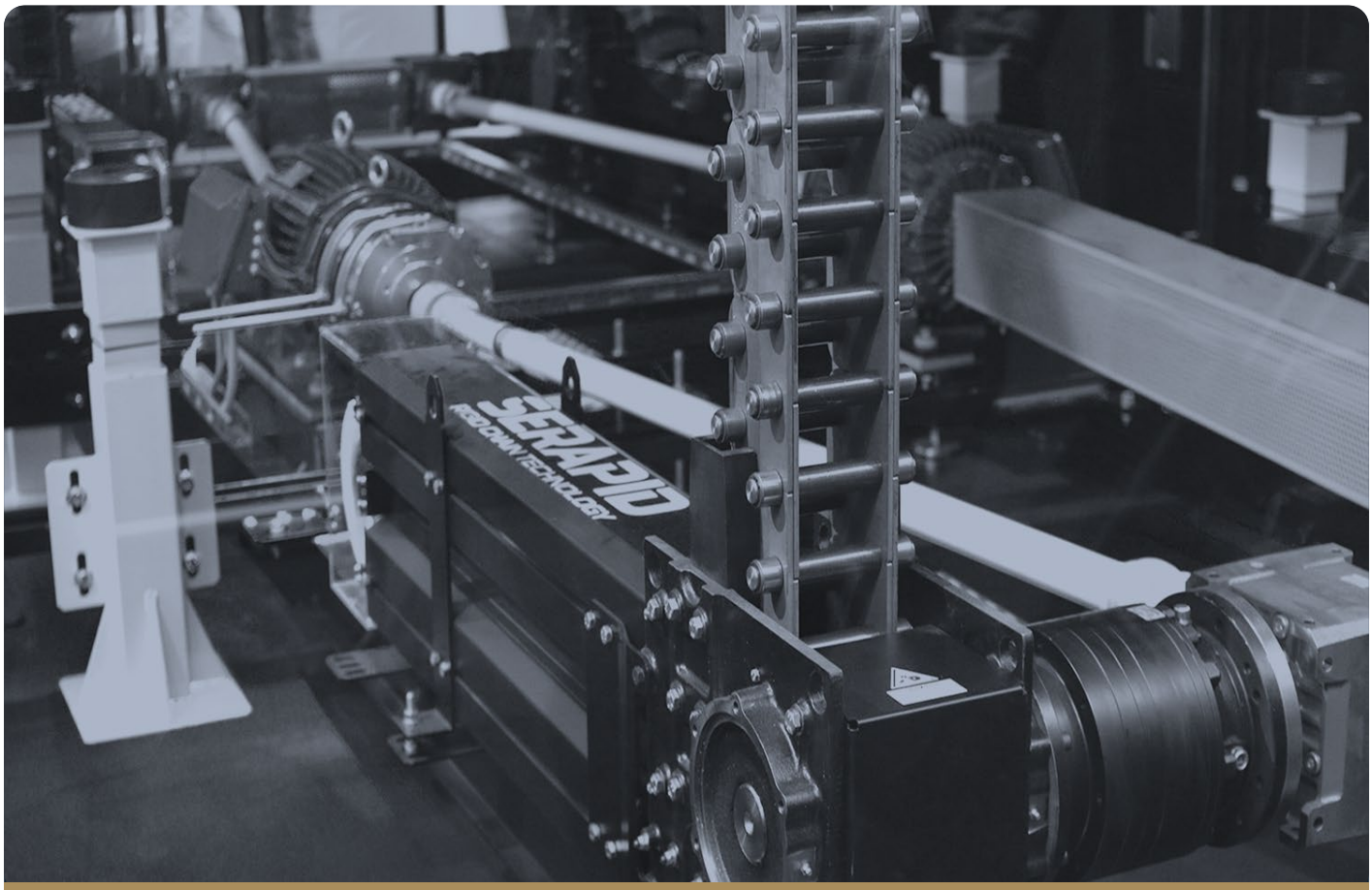

PRODUCT **OPTIONS**

MAGAZINE (STRAND) OPTIONS

LOAD CELL / REACTION PLATES

INTERMEDIATE FRAMES

POSITIONING DEVICES

SERAPID

TECHNICAL GUIDELINES
MAGAZINE OPTIONS

1-Strand-Magazine

2-Strand-Magazine

3-Strand-Magazine

STRAND CONFIGURATION	Stroke MIN (mm)	Stroke MAX (mm)	Step Range (mm)	Linear Mass* (kg)
LL 30 – 1-Strand-MAG	200	1900	▸ 100	0.6 + (Ct*2.5)
LL 30 – 2-Strand-MAG	500	1900	▸ 100	2.0 + (Ct*2.5)
LL 50/50R – 1-Strand-MAG	400	4000	▸ 100	2.0 + (Ct*5)
LL 50/50R – 2-Strand-MAG	1000	4000	▸ 100	5.0 + (Ct*4.5)
LL 50/50R – 3-Strand-MAG	2000	4000	▸ 300	12.5 + (Ct*3.5)
LL 80/80R – 1-Strand-MAG	800	4800	▸ 100	7.0 + (Ct*12)
LL 80/80R – 2-Strand-MAG	1000	6400	▸ 100	16.0 + (Ct*10)
LL 80/80R – 3-Strand-MAG	2200	6400	▸ 300	41.0 + (Ct*8)
LL 100/100R – 1-Strand-MAG	1000	6800	▸ 200	11.5 + (Ct*19)
LL 100/100R – 2-Strand-MAG	1000	8000	▸ 200	27.0 + (Ct*16)
LL 100/100R – 3-Strand-MAG	4000	7900	▸ 300	63.5 + (Ct*13)

*Weights may vary depending on strand design.
Ct = Total Stroke / Travel Distance

LOAD CELL & REACTION PLATES

LOAD CELL OPTION

The load cell allows monitoring at the top of the lift column where the force is applied utilizing a force transducer with a thin film sensor for increased accuracy.

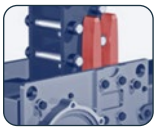

REACTION PLATES OPTION

For speeds above 200 mm/s, and for long stroke distances, LinkLift must be equipped with long reaction plates. Stroke distances are defined below:

BASIC CONFIGURATION **WITH LOAD CELL**

WITH LONG REACTION PLATES **WITH LONG REACTION PLATES AND LOAD CELL**

MODEL	LONG REACTION PLATE NEEDED
LL50/R	Ct > 3 m
LL80/R	Ct > 5 m
LL 100/R	Ct > 7 m
	Ct = Total Stroke / Travel Distance

MODEL	A mm	B mm	C mm
LL30	190	255	225/255
LL50	290.5	320.5	366
LL50R	290.5	350.5	366
LL80	460	480	580
LL80R	460	500	580
LL 100/R	572	592	722

INTERMEDIATE FRAMES

LOWEST POSSIBLE POSITION

Adding intermediate frames to the system increases the height of the lowest possible position.

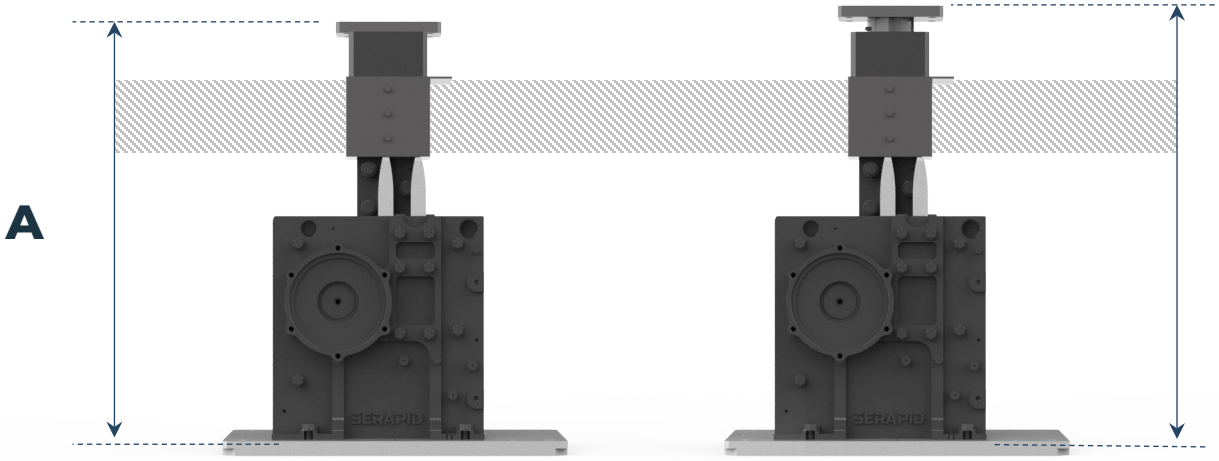

BASIC CONFIGURATION + INTERMEDIATE FRAME

INTERMEDIATE FRAME WITH LOAD CELL

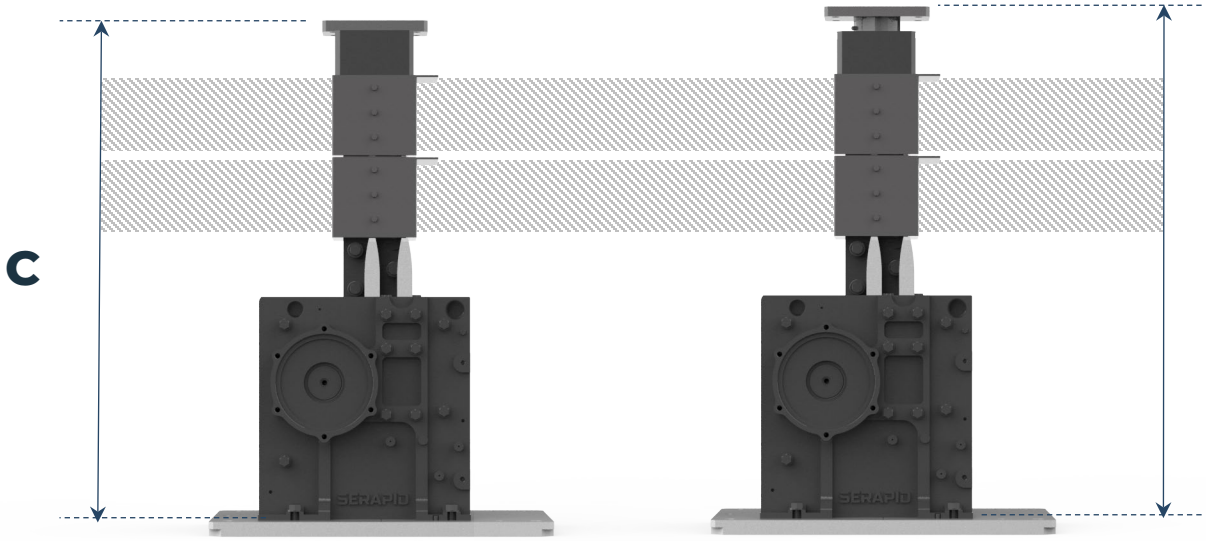

BASIC CONFIGURATION + DUAL INTERMEDIATE FRAMES

DUAL INTERMEDIATE FRAMES WITH LOAD CELL

MODEL	A mm	B mm	C mm	D mm
LL50/R	590	605	790	805
LL80/R	933	940	1253	1260
LL 100/R	1148	1162	1538	1552

POSITIONING OPTIONS

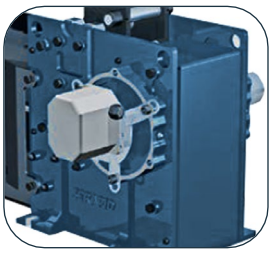

CAM LIMIT SWITCH | REPEATABLE POSITIONING

A CAM Limit switch is available with 2 to 8 repeatable positions, which can be set independently of each other. The switch is mounted to the drive shaft with an appropriate mounting bracket.

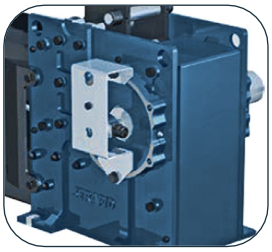

ENCODER | PROGRAMMABLE POSITIONING

An encoder provides programmable monitoring and positioning with a resolution of 1024 points per travel and accuracy of 0.5mm at the end of the column. The encoder is mounted to the drive shaft with an appropriate mounting bracket.

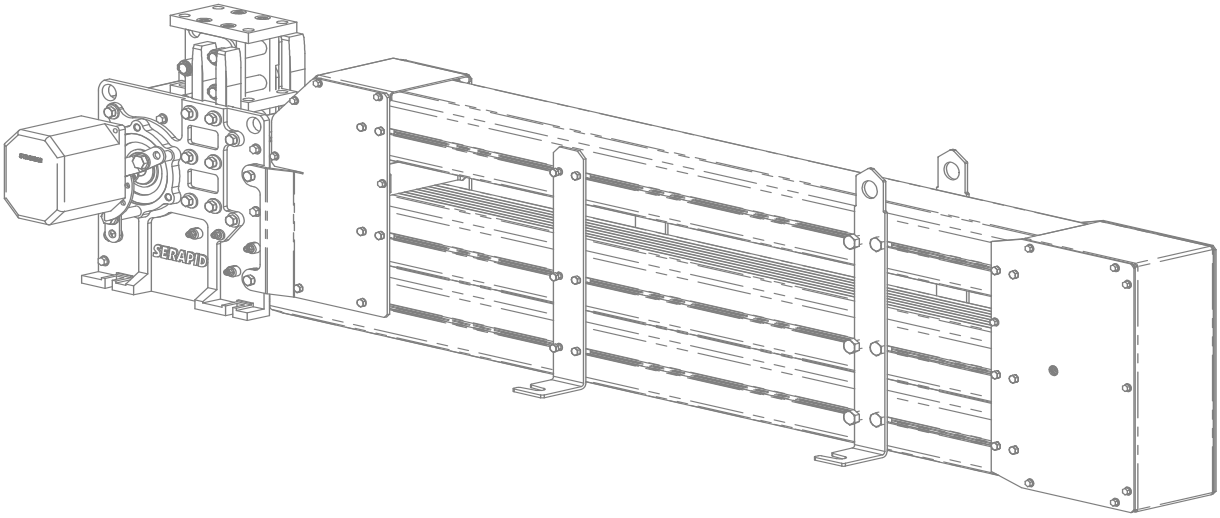

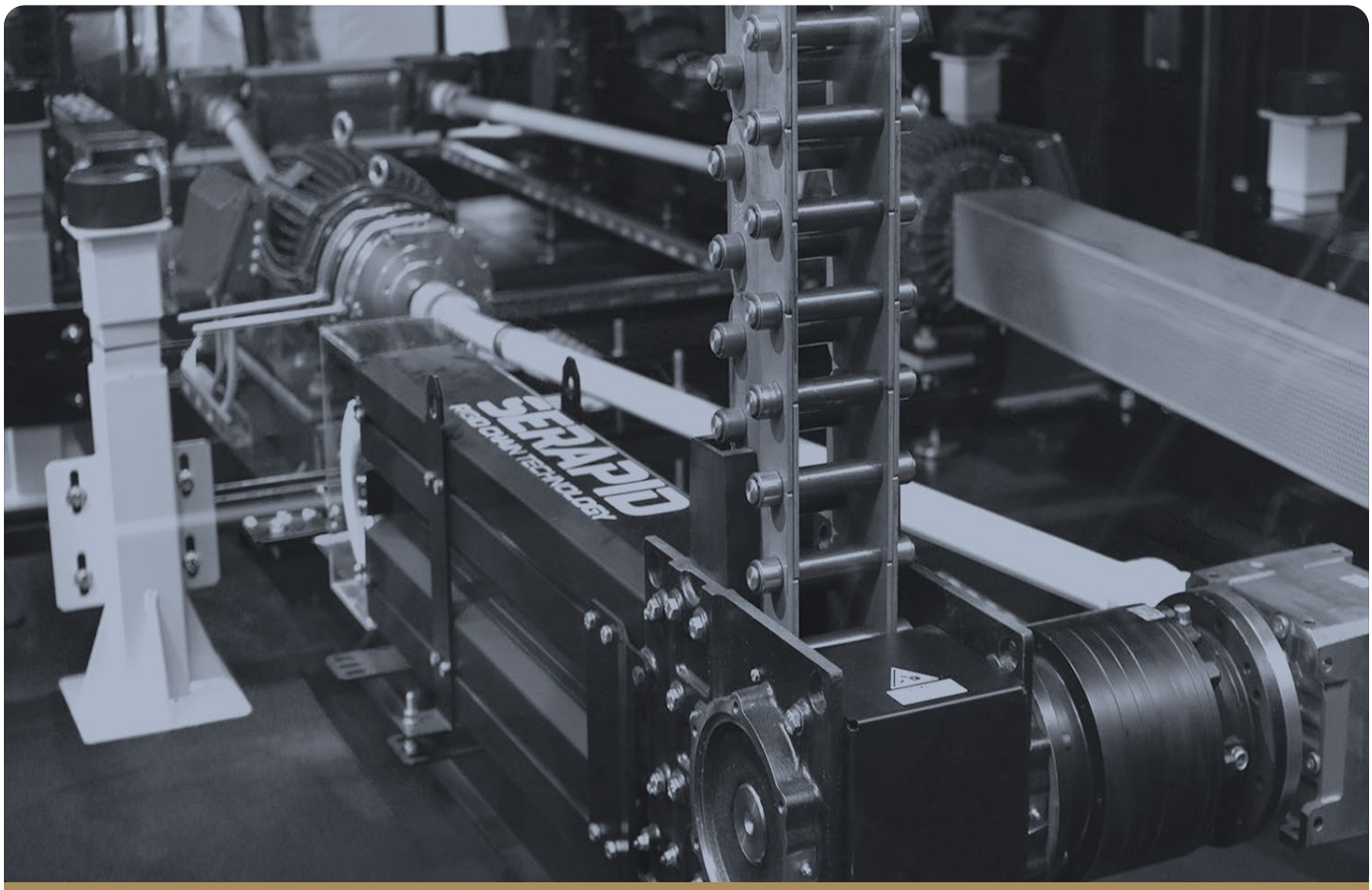

SAMPLE **DRAWINGS**

LL30

LL30LT

LL50/50R

LL80/80R

LL100/100R

SERAPID

LL30
DRAWINGS

FOR ILLUSTRATION ONLY
UNCONTROLLED IF DOWNLOADED OR PRINTED. NOT APPROVED FOR OPERATIONAL USE.
Contact us for controlled 2D Drawings and additional strand configurations.

Shown here:
- LL30 assembly
- No load cell
- Short reaction plates

Contact us for detailed drawings.

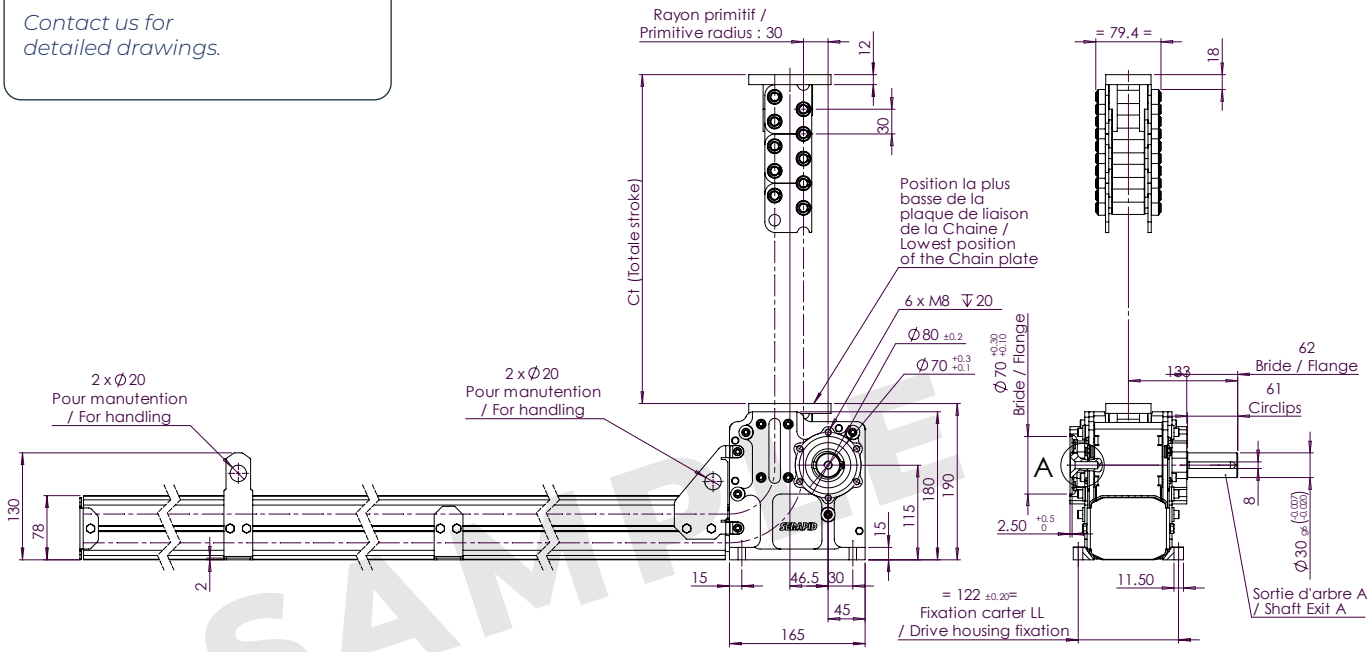

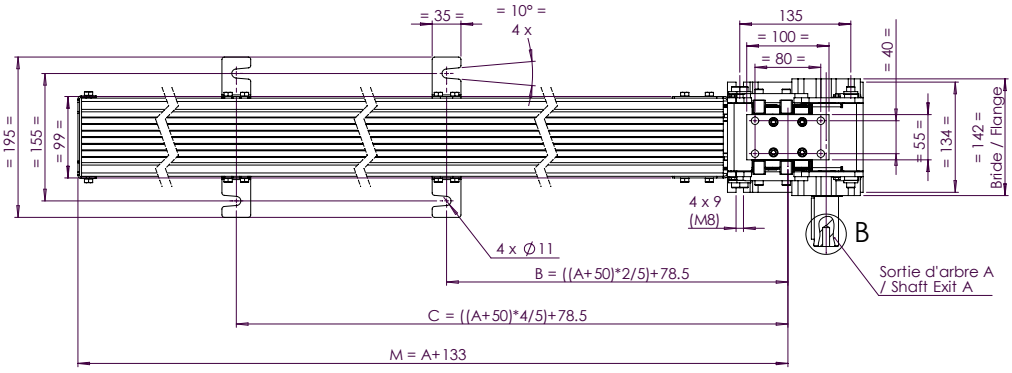

LL30LT
COMPARISON

FOR ILLUSTRATION ONLY
UNCONTROLLED IF DOWNLOADED OR PRINTED. NOT APPROVED FOR OPERATIONAL USE.
Contact us for controlled 2D Drawings and additional strand configurations.

LOW TRIM OPTION

The LinkLift 30LT (Low Trim) is a made-to-measure product aimed at addressing specific space-critical project needs. Product specifications available on request.

LL30

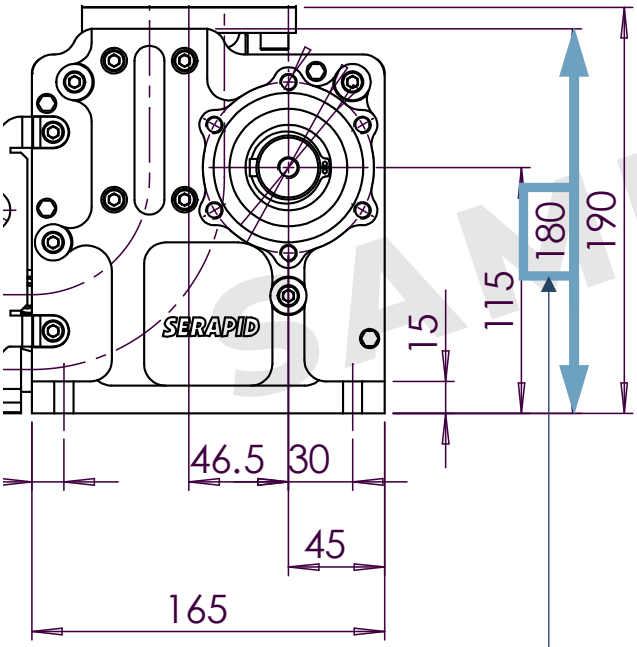

LL30LT

Product specifications available on request

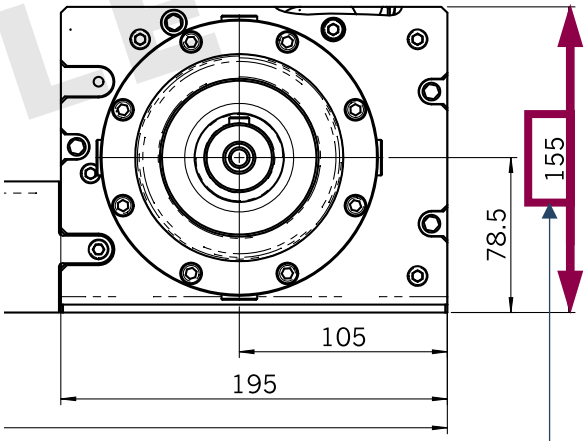

Difference 25 mm

LL50/50R
DRAWINGS

FOR ILLUSTRATION ONLY
UNCONTROLLED IF DOWNLOADED OR PRINTED. NOT APPROVED FOR OPERATIONAL USE.
Contact us for controlled 2D Drawings and additional strand configurations.

Shown here:
- LL50 assembly
- No load cell
- Short reaction plates

Contact us for detailed drawings.

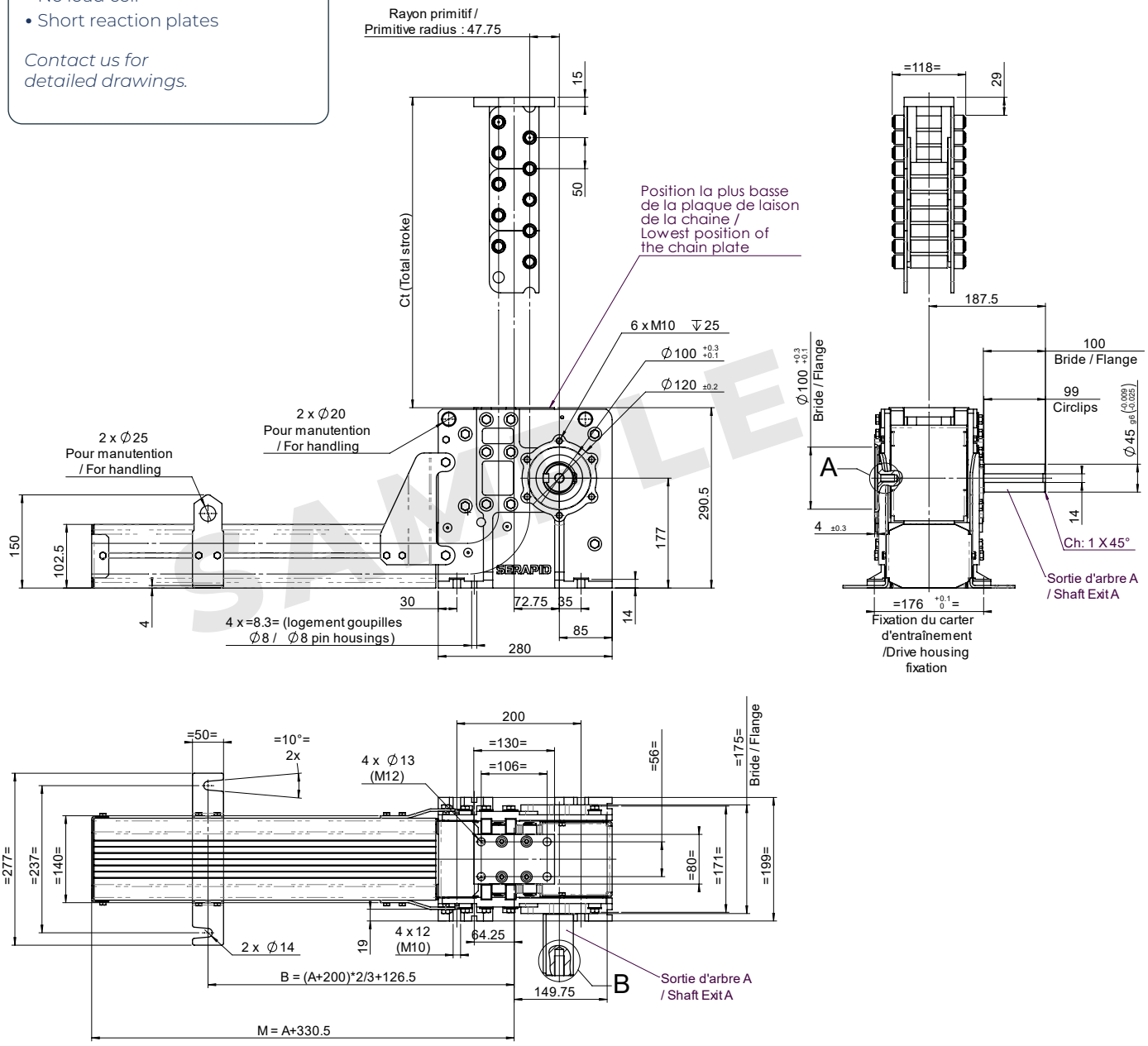

LL80/80R
DRAWINGS

FOR ILLUSTRATION ONLY
UNCONTROLLED IF DOWNLOADED OR PRINTED. NOT APPROVED FOR OPERATIONAL USE.
Contact us for controlled 2D Drawings and additional strand configurations.

Shown here:
- LL80 assembly
- No load cell
- Short reaction plates

Contact us for detailed drawings.

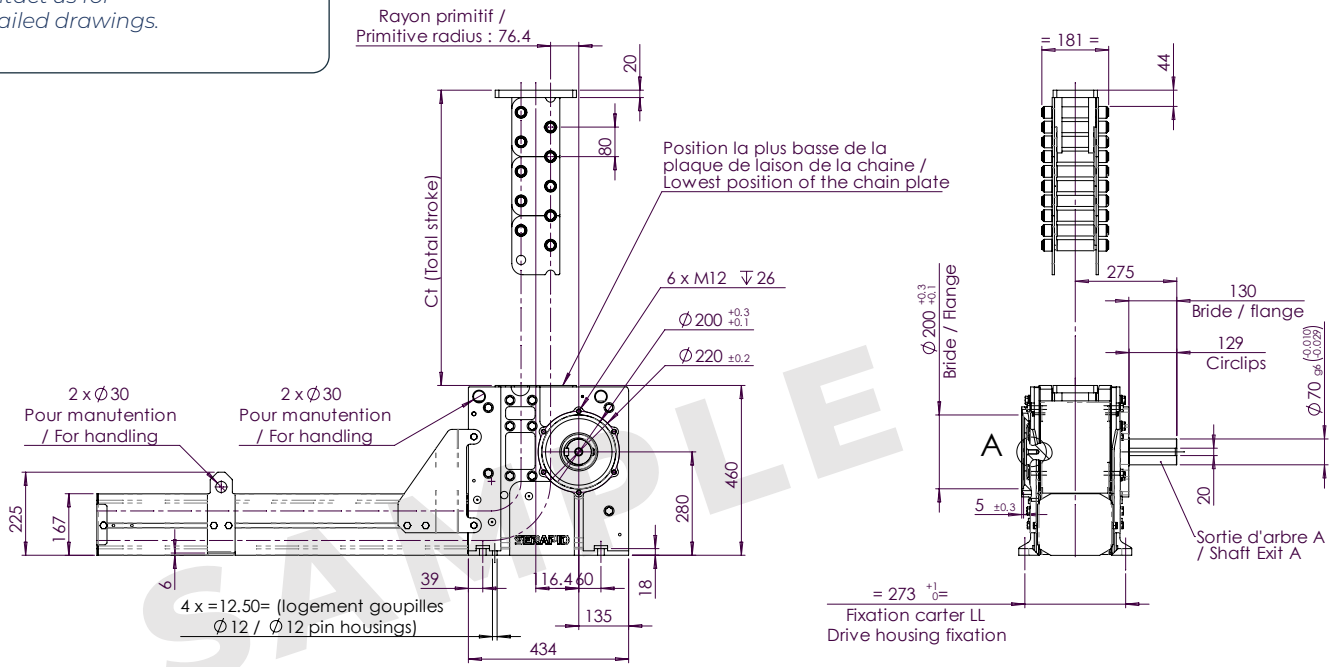

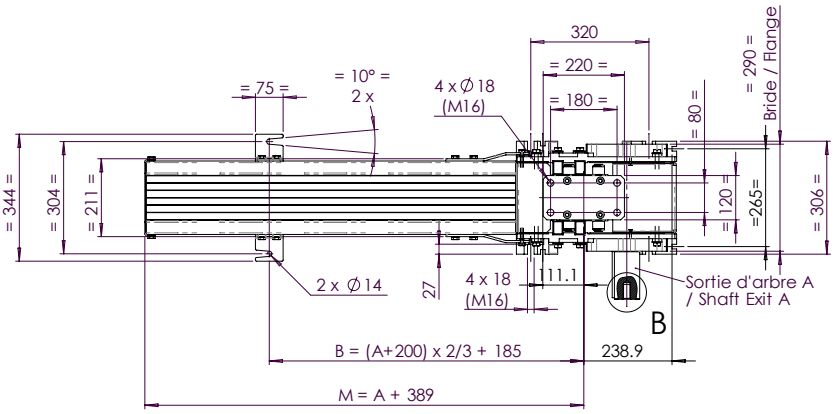

LL100/100R
DRAWINGS

FOR ILLUSTRATION ONLY
UNCONTROLLED IF DOWNLOADED OR PRINTED. NOT APPROVED FOR OPERATIONAL USE.
Contact us for controlled 2D Drawings and additional strand configurations.

Shown here:
- LL100 assembly
- No load cell
- Short reaction plates

Contact us for detailed drawings.

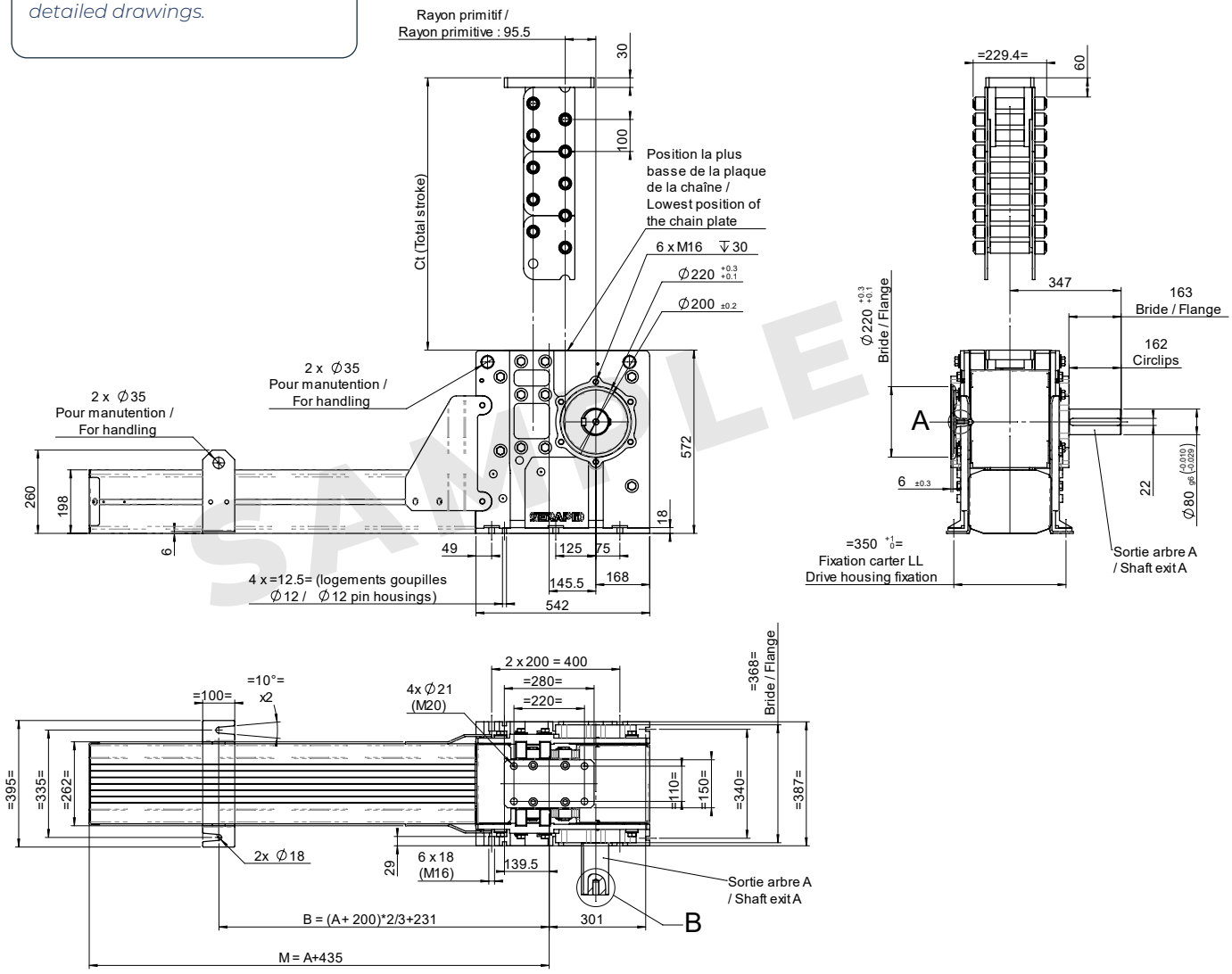

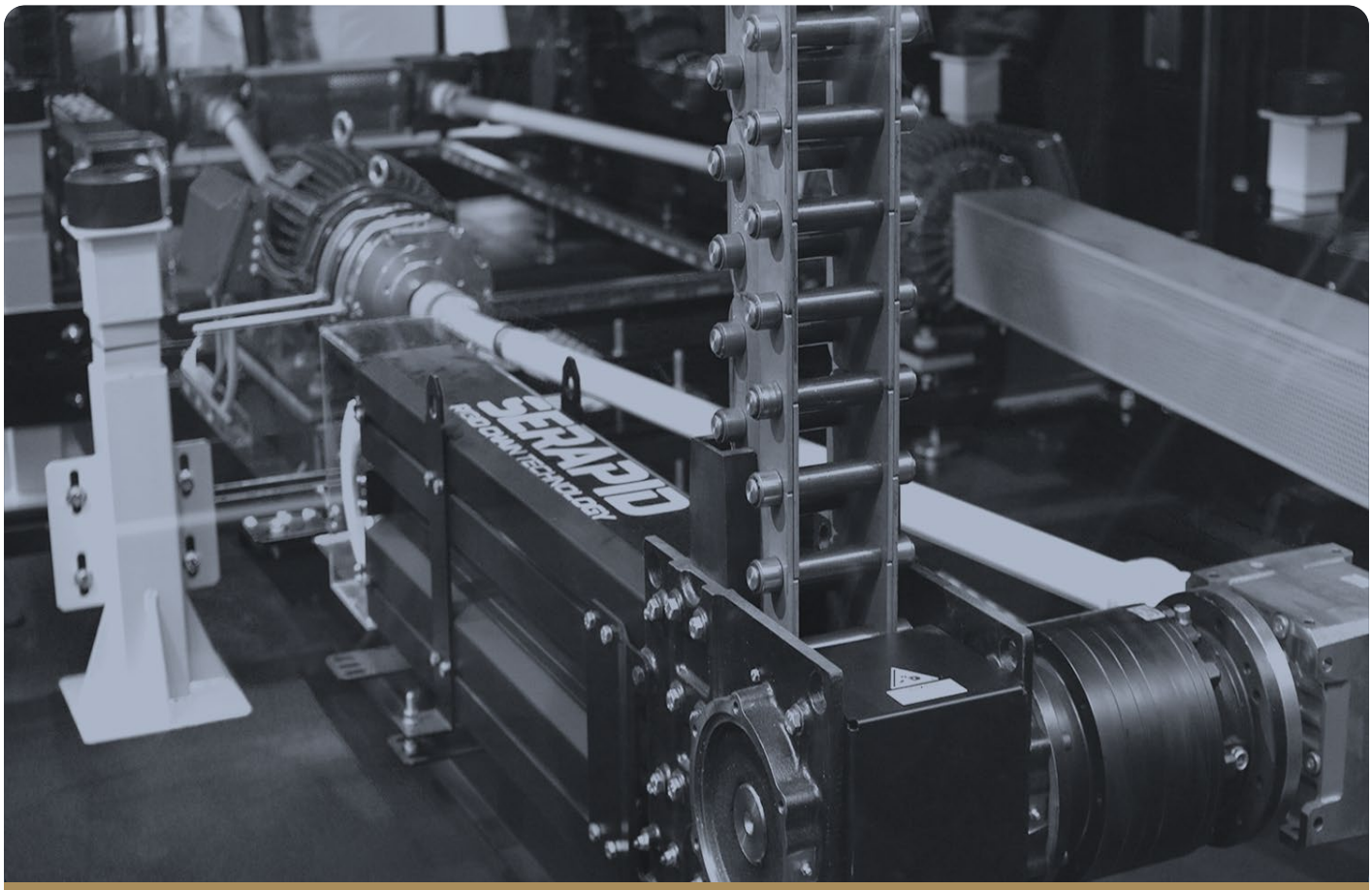

CONTACT US

SERAPID France

4 Rue des frères Robbe
ZA Eurochannel
F-76370 Martin-Eglise

+33 (0)2 32 06 35 60
info-fr@serapid.com

SERAPID Deutschland GmbH

Wilhelm-Frank-Strasse 30
D-97980
Bad Mergentheim

+49 (0)7931 96 47-0
info-de@serapid.com

SERAPID USA Inc.

34100 Mound Road
Sterling Heights, MI
48310

+1 (586)274-0774
info-us@serapid.com

SERAPID UK Ltd.

Elm Farm Park, Great Green
Thurston Bury St. Edwards
IP31 3SH

+44 (0)1359 233335
info-uk@serapid.com

SERAPID Singapore PTE Ltd.

51 Goldhill Plaza, #21-02
Singapore
308900

+49 (0)7931 96 47-0
info-sg@serapid.com

SERAPID

022024 PL201 First Edition